## Step 7

Carefully, rotate the Shelf Assembly (from Step 5), upside down as shown.

Place the Base Tube Assembly (from Step 6) onto the Vertical Legs of the Shelf Assembly.

Attach the Base Tube to each Leg using a total of three Base Tube Screws.

Tighten all Support, Caster, and Base Tube Screws.

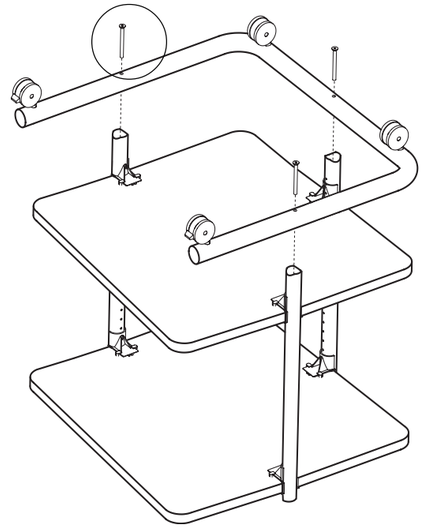

Base Tube Screw
325-5000-00

## Step 8

Rotate your Cart over onto the Casters.

Pop the 1.5" Small End Caps into the Vertical Legs and the 1.75" Large End Caps into the Base Tube.

**Congratulations!** Your assembly is complete.

Please return the enclosed Registration Card to receive our product updates, new catalogs, and sale flyers.

**Thank you for choosing Anthro!**

***1.5" Small End Cap***

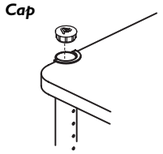

***1.75" Large End Cap***

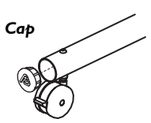

**Questions?**

300-5383-00

**1-800-325-3841**

# 24" Wide AnthroCart

## Assembly Instructions

ANTHRO® TECHNOLOGY FURNITURE®

**These Assembly Instructions are for the GT03xx.**

Before beginning assembly of your 24" Wide AnthroCart, please take a moment to review the parts listed below to verify that your shipment is complete.

**Does your Cart have 4" Casters?***
*(Such as a GT03xx4. Your Caster Part Numbers are given here.)*

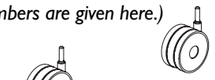

4" Non-Locking Caster
150-5010-00

4" Locking Caster
150-5011-00

**Does your Cart have Glides?***
*(Such as a GT03xxGL. Your Glide and Glide Insert Part Numbers are given here.)*

Glide Insert
525-1004-00

Glide
325-5042-00

To make the assembly of your 24" Wide AnthroCart even easier, we have included all of the required tools. The handy Hex Driver Bit can be used in your electric drill in place of the Hex Driver.

Hex Driver 5/32" ..... *375-5000-00*

Hex Driver Bit 5/32" ..... *375-5003-00*

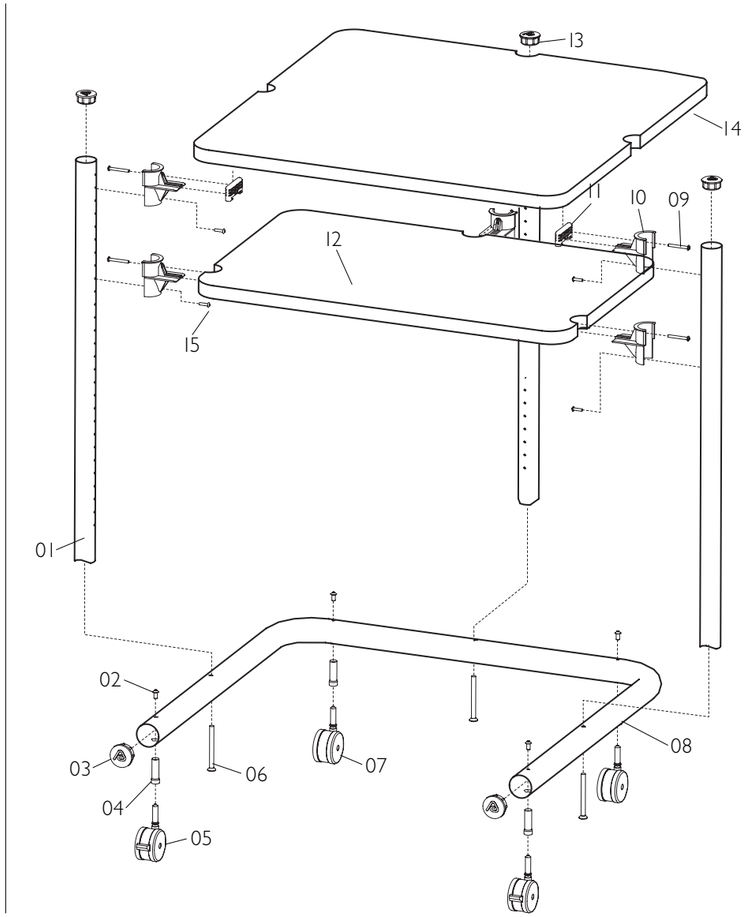


## Enclosed Parts List

*Detailed views of all Hardware is provided with each Assembly Step.*

| | | |
|---|---|---|
| 01– Vertical Legs | *Qty. 3* | *125-5020-xx* |
| 02– Insert Screws | *Qty. 4* | *325-5052-00* |
| 03– 1.75" Large End Caps | *Qty. 2* | *175-5021-xx* |
| 04– Caster Inserts | *Qty. 4* | *525-1000-00** |
| 05– 2 3/8" Locking Casters | *Qty. 2* | *150-5003-00** |
| 06– Base Tube Screws | *Qty. 3* | *325-5000-00* |
| 07– 2 3/8" Non-Locking Casters | *Qty. 2* | *150-5002-00** |
| 08– 24" Wide Base Tube | *Qty. 1* | *125-5005-xx* |
| 09– Clamp Screw | *Qty. 6* | *325-5086-00* |
| 10– Shelf Support | *Qty. 6* | *175-5060-xx* |
| 11– Shelf Clamp | *Qty. 6* | *175-5059-xx* |
| 12– 24" Wide Small Shelf | *Qty. 1* | *100-6006-xx* |
| 13– 1.5" Small End Caps | *Qty. 3* | *175-5020-xx* |
| 14– 24" Wide Large Shelf | *Qty. 1* | *100-6004-xx* |
| 15– Support Screws | *Qty. 6* | *325-5010-00* |

***All Fastener quantities listed here are the minimum needed for your Cart assembly. There may be a few extra Fasteners included, which are not counted in the Parts List.***

Anthro Corporation Technology Furniture® 10450 SW Manhasset Drive Tualatin, Oregon 97062

March 2006

***SAVE THESE INSTRUCTIONS!***

anthro.com

# 24" Wide AnthroCart

## Assembly Instructions

**Questions? 1-800-325-3841**

## Step 1

Before proceeding, please review the Assembly Instructions of all Anthro Products you purchased and are planning to include in this installation.

Decide on the shelf configuration that works best for you. Generally, customers place the large shelf at the top of the legs and the small shelf at the bottom of the legs, and that's how these instructions are organized. This configuration leaves 18" clearance between the shelves.

Shelves can be installed at any height (in 1" increments), so find the best configuration for you. If you need help configuring your cart, just give us a call!

## Step 2

Attach three Shelf Supports to each Shelf. Begin by first installing a Shelf Clamp into the Shelf notch. Be sure the pointed barbs face towards the outer Shelf edge.

Next, slide a Shelf Support into the recesses of the Shelf Clamp and Shelf. Push in as far as possible.

Finally, secure with a Clamp Screw.

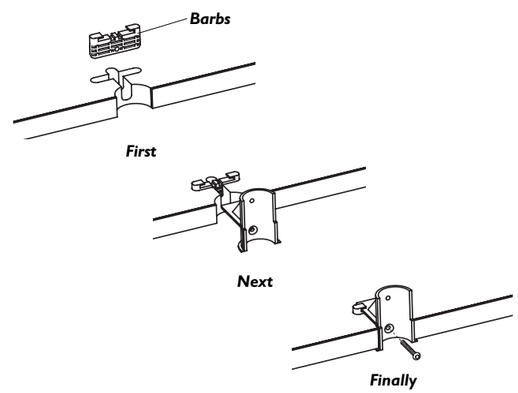

Clamp Screw
325-5086-00

## Step 3

Loosely attach the Large Shelf to Hole 2 from the top of one Vertical Leg using one Support Screw.

NOTE: This will place your Large Shelf 28" from the floor using the standard 2 $^{3}/_{8}$" Casters.

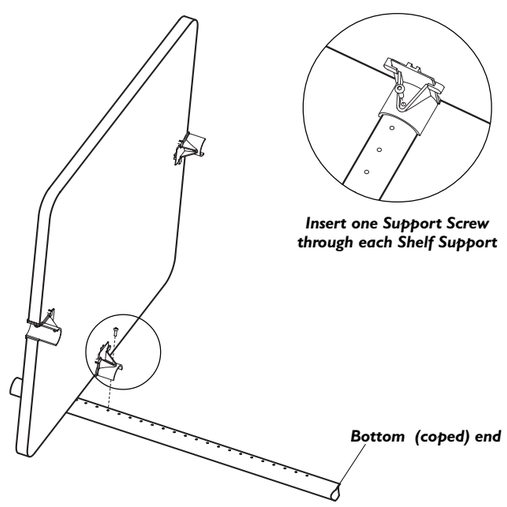

Support Screw
325-5010-00

## Step 4

Loosely attach the Small Shelf to the bottom hole on the Vertical Leg Assembly (from Step 3) using one Support Screw.

*NOTE: Handle the Shelf Assembly carefully until the Cart if fully assembled.*

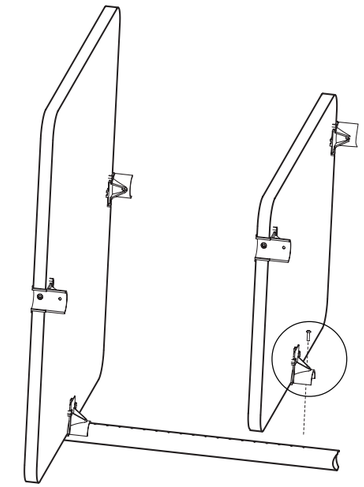

Support Screw
325-5010-00

## Step 5

Loosely attach the 2nd and 3rd Vertical Legs to the Shelf Assembly (from Step 4) using one Support Screw per Shelf Support.

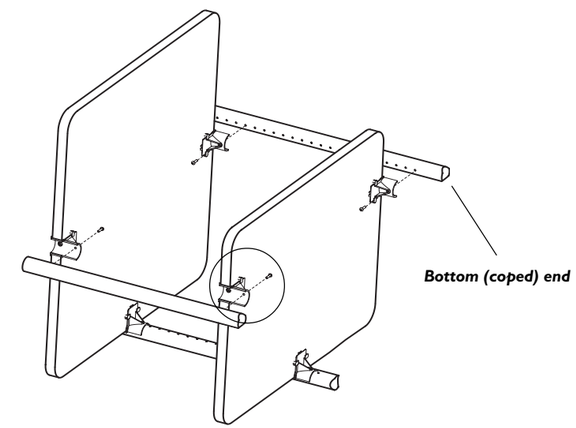

Support Screw
325-5010-00

## Step 6

Install all four Caster Inserts into the Base Tube and secure with one Caster Screw per Insert.

Push the Casters, (locking ones in front) into the Caster Inserts. This is a friction fit and will require some effort. You may find it helpful to tap the bottom of the caster with the rubber mallet provided.

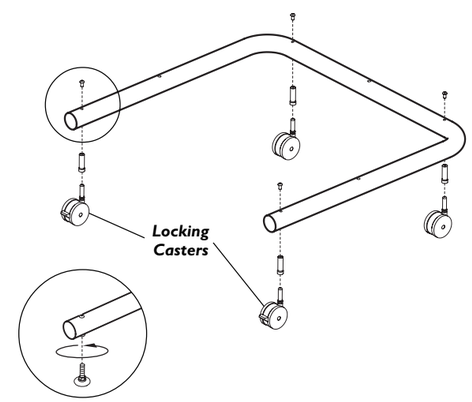

Caster Screw
(small pink patch on end)
325-5052-00