Step 7

Place the Bench Shelf (laminate facing down) onto the floor.

With the help of another person, carefully rotate the Base Assembly *(from Step 6)* over onto the Shelf.

Position the holes on the Pans and Arms to align with the twelve predrilled holes on the Shelf. Insert two Wood Screws through each center opening of the Bench Pans *(shown encircled at right)*.

Install the remaining Wood Screws into each of the Arms and Pans, a total of twelve Wood Screws will be installed.

If a drawer and/or keyboard caddy are a part of this configuration, install them now using their instructions.

With the help of a buddy, carefully rotate your AnthroBench back over onto the Glides.

1¼" Wood Screw
325-5178-00

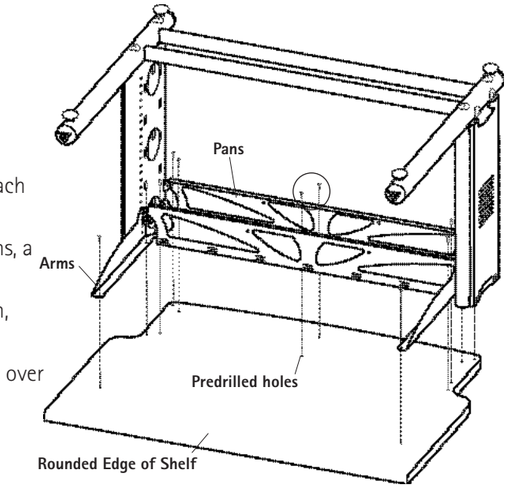

Step 8 (requires a 3-Way Wrench)

FIRST- from the rear of your Bench, align one Buttress with one hole on the Back Pan. Install a Pan Screw through the Buttress and loosely capture using a Keps Nut on the opposite side.

SECOND- position one Cross End on the remaining Buttress end and install a Pan Screw and Keps Nut in the same manner, but do not fully tighten.

THIRD- rotate the Buttress to align the Cross End with two openings on the Leg. Secure the Cross End to the Leg using two Support Screws.

Repeat this entire procedure for the remaining Buttress and Cross End on the opposite end.

Tighten all Pan Screws, Support Screws and Keps Nuts.

Congratulations! Your 48" AnthroBench assembly is complete. Please return the enclosed Registration Card to receive our product updates, new catalogs, and sale flyers.

Thank you for choosing Anthro!

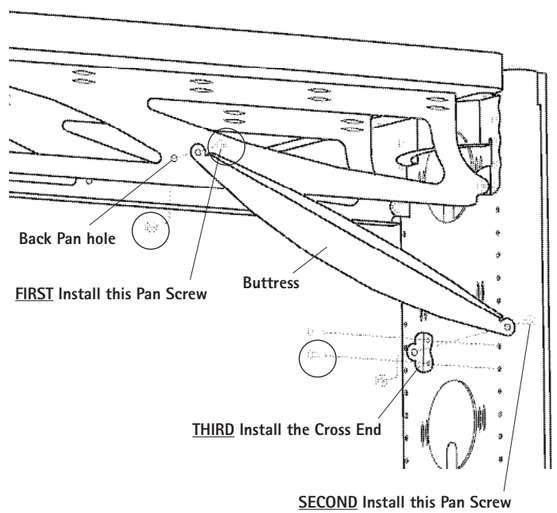

NOTE: The purpose of the Buttress is not to support your Bench Shelf. It is intended to make your Bench absolutely rigid under extreme weight conditions.

(¼-20 X .5") Pan Screw
325-5003-00

(¼-20) Keps Nut
325-5130-03

Support Screw
325-5010-00

Removal of Leg Covers and Cable Grommets

Remove the Leg Cover by: 1. First removing the top two Workstation Screws. 2. Slightly lift the Cover upward and off the lower metal mounts.

Cable Grommets are snapped into and out of each of the circular Leg openings.

Workstation Screw
(not counted in Parts List)
325-5092-00

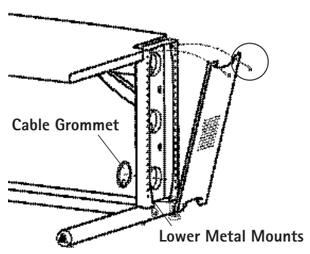

300-5000-00

Questions? **1-800-325-3841**

48" AnthroBench

Assembly Instructions

ANTHRO®
TECHNOLOGY FURNITURE®

These Assembly Instructions are for the 48" AnthroBench models: B4829zz/xx, S4829zz/xx, B4835zz/xx and S4835zz/xx. Before beginning assembly of your AnthroBench, please take a moment to review the parts listed below to verify that your shipment is complete.

Your AnthroBench is heavy!
Don't try to lift it yourself. Work with a buddy.

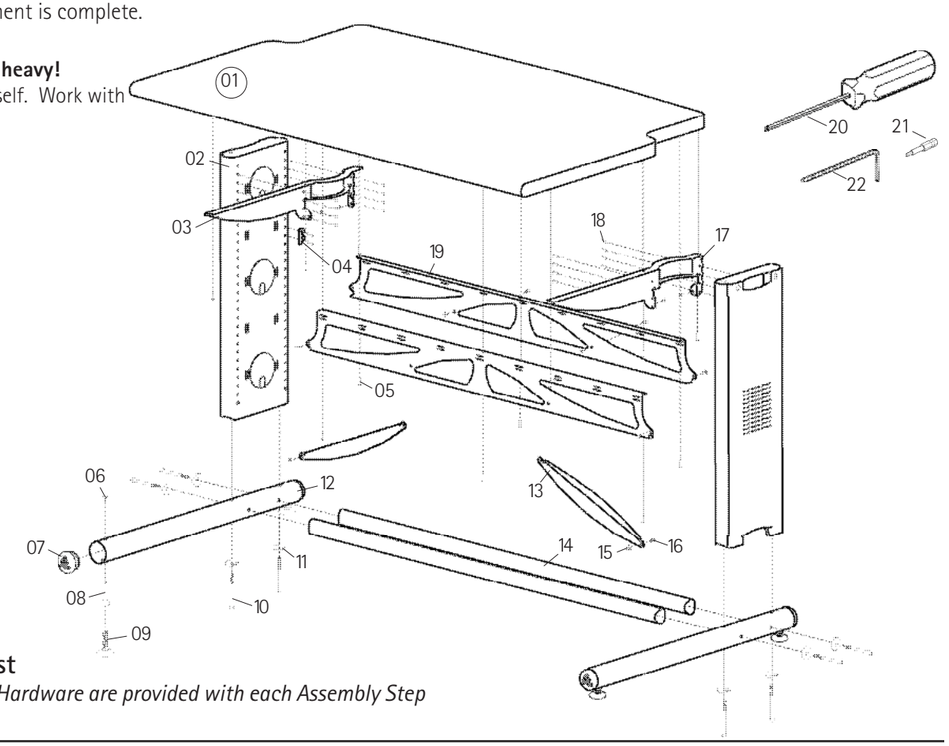

Enclosed Parts List

Detailed views of all Hardware are provided with each Assembly Step

01– 48" Wide Bench Shelf	*Qty. 1*	*(see below)*
28" Deep (S4829zz/xx and S4835zz/xx)		*100-6406-00*
36" Deep (B4829zz/xx and B4835zz/xx)		*100-6349-00*
02– Bench Leg Assemblies	*Qty. 2*	*(see below)*
25" Bench Legs (S4829zz/xx and S4835zz/xx)		*835-5008-00*
31" Bench Legs (B4829zz/xx and B4835zz/xx)		*835-5009-00*
03– Bench Arm Left	*Qty. 1*	*225-5357-00*
04– Cross Ends	*Qty. 2*	225-5334-00
05– 1¼" Wood Screws	*Qty. 12*	*325-5178-00*
06– Glide Insert Screws	*Qty. 4*	*325-5052-00*
07– 2.5" End Caps	*Qty. 4*	*175-5158-00*
08– Glide Inserts	*Qty. 4*	*525-5030-00*
09– Glides (½-13 X 2")	*Qty. 4*	*325-5165-00**
10– Cap Screws (5/16-18 X 4")	*Qty. 8*	*325-5166-00*
11– Curved Washers	*Qty. 8*	*225-2050-00 or 225-3522-00*
12– Bench Base Tubes	*Qty. 2*	*(see below)*
28" Deep (S4829zz/xx and S4835zz/xx)		*125-5225-00*
36" Deep (B4829zz/xx and B4835zz/xx)		*125-5183-00*
13– 15" Bench Buttress	*Qty. 2*	*225-5386-00*
14– 41.5" Bench Cross Tubes	*Qty. 2*	*125-5184-00*
15– Keps Nuts (¼-20)	*Qty. 8*	*325-5130-03*
16– Pan Screws (¼-20 X .5")	*Qty. 8*	*325-5003-00*
17– Bench Arm Right	*Qty. 1*	*225-5358-00*
18– Support Screws	*Qty. 20*	*325-5010-00*
19– 48" Bench Pans	*Qty. 2*	*225-5370-00*

All Screw quantities listed here are the minimum needed for your Bench assembly. There may be a few extra Screws included, which are not counted in the Parts List.

To make the assembly of your Anthro Bench even easier, we have included the required tools.. The handy Hex Driver Bit can be used in your electric drill in place of the Hex Driver.

20- Hex Driver 5/32"	*Qty. 1*	*375-5000-00*
21- Hex Driver Bit 5/32"	*Qty. 1*	*375-5003-00*
22- Hex Key ¼"	*Qty. 1*	*375-5024-00*
3-Way Wrench *(not shown)*	*Qty. 1*	*225-5196-03*

Anthro Corporation Technology Furniture® 10450 SW Manhasset Drive Tualatin, Oregon 97062

April 2013, Rev F

SAVE THESE INSTRUCTIONS!

48" AnthroBench

Assembly Instructions

Questions? 1-800-325-3841

Step 1

Install two Bench Glide Inserts into each Bench Base Tube and secure with one Insert Screw per Insert.

Pop two End Caps into the ends of both Base Tubes.

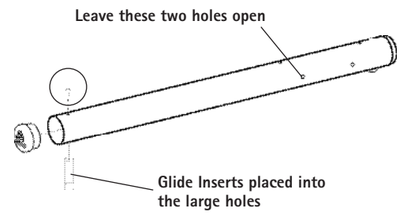

Insert Screw
(small pink patch on end)
325-5052-00

Step 2

Orient one Bench Leg Assembly with one Base Tube Assembly *(from Step 1).* The Glide Inserts should be facing down.

Insert one Bench Cap Screw through one Curved Washer, then carefully insert through one of the lower holes on the Base Tube, threading into the Right Leg Assembly.

Repeat this procedure for the remaining three lower holes on the Right and Left Leg Assembly.

If you are installing Bench Glides, install them now by threading one into each Glide Insert. If you are upgrading to 5" Casters, install them now following their enclosed instructions.

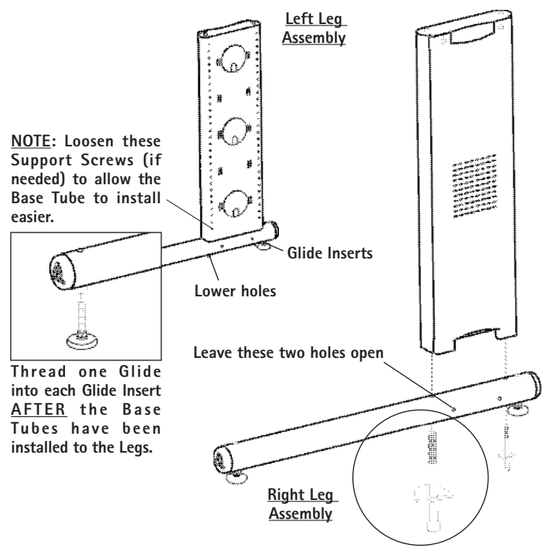

($^5/_{16}$-18 X 4") Bench Cap Screw
325-5166-00

Curved Washer
225-2050-00 or 225-3522-00

Step 3

Position the Right Leg Assembly *(from Step 2)* with two Cross Tubes as shown. Insert one Bench Cap Screw with a Curved Washer through a side hole, carefully threading the Screw into the Cross Tube.

Repeat entire procedure for the remaining three side holes.

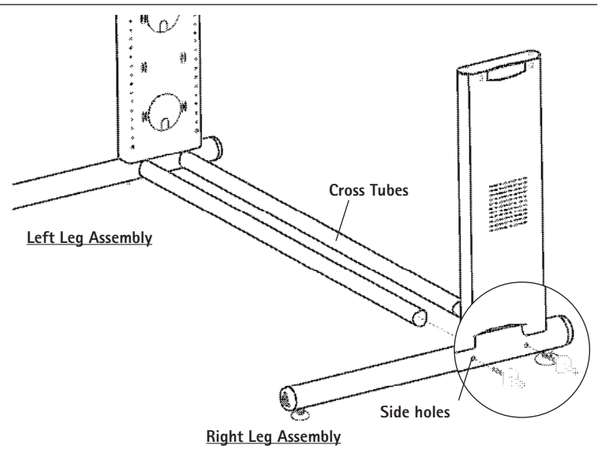

($^5/_{16}$-18 X 4") Bench Cap Screw
325-5166-00

Curved Washer
225-2050-00 or 225-3522-00

Step 4

Determine the desired height of your Shelf. This instructions will place the shelf at the top of the legs, either 29" or 35" from the floor *(depending on which height Bench you purchased).* If you install 5" casters on your bench, they'll make your Bench 5" taller.

The holes along the Leg Assemblies are spaced at 1" increments. Adjusting either one hole up or down will modify the final Shelf height by 1" respectively. Rotating the Glides will also provide additional height adjustment.

NOTE: Your Shelf height can be adjusted at a later time if needed by following Steps 5-8 below.

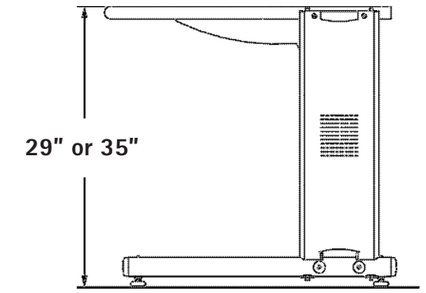

REMINDER: You may want to measure your equipment to make sure it fits into the selected Shelf location.

Step 5

Position the Left Bench Arm onto the Left Leg Assembly.

Align the top two openings of the Arm with Hole 2 of the Leg Assembly. Loosely install a Support Screw through the top two holes of the Arm into the Leg.

Install the remaining six Support Screws into the Left Arm, but do not fully tighten any of the Support Screws.

Repeat entire procedure for the Right Bench Arm on the Right Leg Assembly.

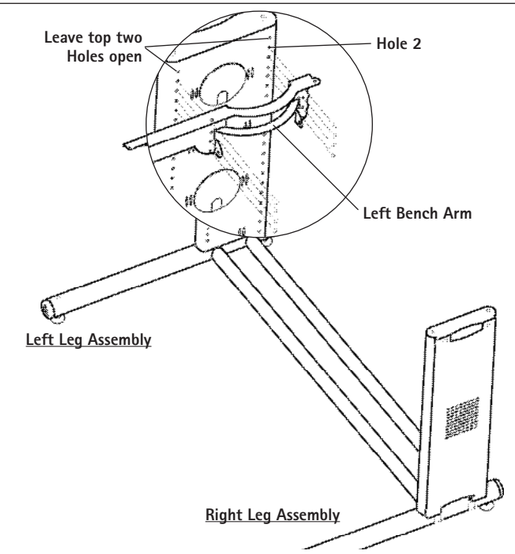

Support Screw
325-5010-00

Step 6 (requires a 3-Way Wrench)

Position a Bench Pan between the Arms, aligning the two tabs on each Arm with the two holes in the lower corners of a Pan. Insert a Pan Screw through the Pan and Arm Tab- capturing it with a Keps Nut *(but do not fully tighten).* Repeat this procedure for the remaining end of the Pan and for the second Pan.

Tighten all Pan and Support Screws.

NOTE: the 3-Way Wrench can be used to assist in tightening the Keps Nuts.

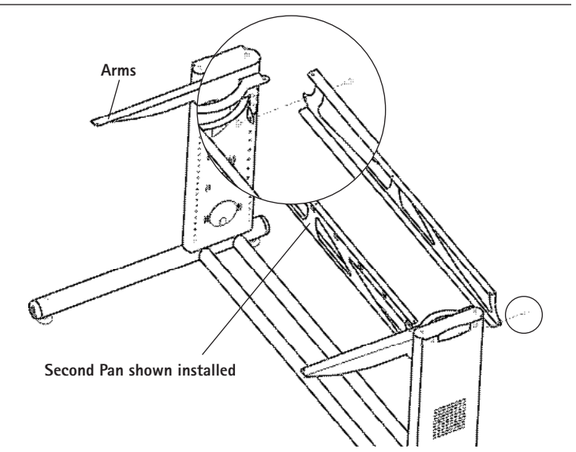

($^1/_4$-20 X .5") Pan Screw
325-5003-00

($^1/_4$-20) Keps Nut
325-5130-03