Step 7

Carefully, rotate the Shelf Assembly (from Step 5), upside down as shown.

Place the Base Tube Assembly (from Step 6) onto the Vertical Legs of the Shelf Assembly.

Attach the Base Tube to each Leg using a total of four Base Tube Screws.

Tighten all Support, Caster, and Base Tube Screws.

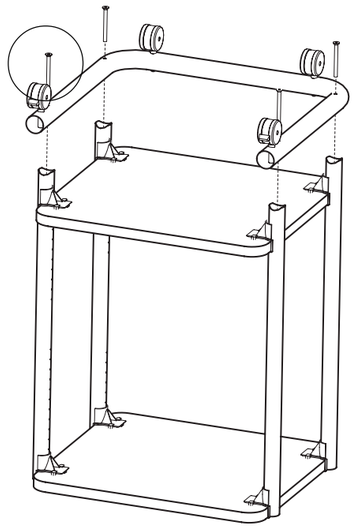

Base Tube Screw
325-5000-00

Step 8

Rotate your PrinterCart over onto the Casters.

Pop the 1.5" Small End Caps into the Vertical Legs and the 1.75" Large End Caps into the Base Tube.

Congratulations! Your assembly is complete.

Please return the enclosed Registration Card to receive our product updates, new catalogs, and sale flyers.

Thank you for choosing Anthro!

1.5" Small End Cap

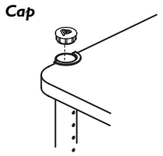

1.75" Large End Cap

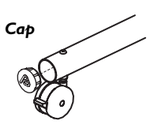

Questions?

300-5386-00

1-800-325-3841

Anthro PrinterCart

Assembly Instructions

ANTHRO®
TECHNOLOGY FURNITURE®

Hello! Thank you for choosing Anthro.

Before beginning assembly of your Anthro PrinterCart, please take *a* moment to review the parts listed below to verify that your shipment is complete.

✍ Does your Cart have 4" Casters?*
(Such as a 030xx4. Your Caster Part Numbers are given here.)

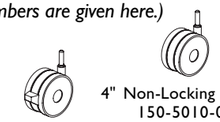

4" Locking Caster
150-5011-00

4" Non-Locking Caster
150-5010-00

✍ Does your Cart have Glides?*
(Such as a 030xxGL. Your Glide and Glide Insert Part Numbers are given here.)

Glide Insert
525-1004-00

Glide
325-5042-00

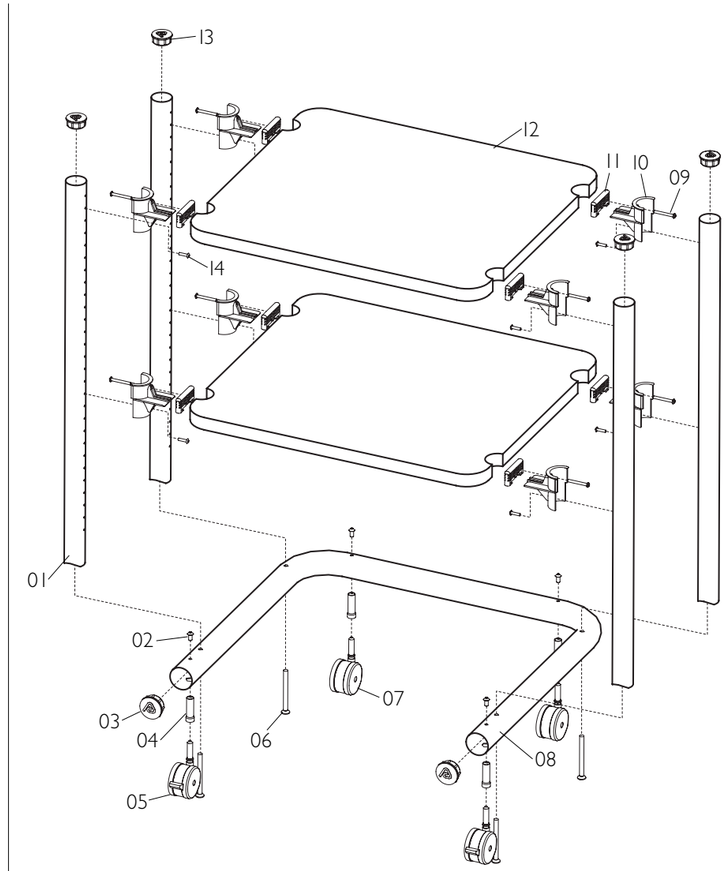

Component list for part#'s 030xx, 035xx, 080xx, 085xx.

01– Vertical Legs ..... *Qty. 4* ..... *(see below)*
- 15.10" Vertical Legs *(035xx, 085xx)* *125-5050-xx*
- 23.875" Vertical Legs *(030xx, 080xx)* *125-5020-xx*

02– Insert Screws ..... *Qty. 4* *325-5052-00*
03– 1.75" Large End Caps ..... *Qty. 2* *175-5021-xx*
04– Caster Inserts ..... *Qty. 4* *525-1000-00**
05– 2 3/8" Locking Casters ..... *Qty. 2* *150-5003-00**
06– Base Tube Screws ..... *Qty. 4* *325-5000-00*
07– 2 3/8" Non-Locking Casters ..... *Qty. 2* *150-5002-00**
08– PrinterCart Base Tube ..... *Qty. 1* ..... *(see below)*
- 24" Wide Base Tube *125-5031-xx*
- 36" Wide Base Tube *125-5058-xx*

09– Clamp Screws ..... *Qty. 8* *325-5086-03*
10– Shelf Supports ..... *Qty. 8* *175-5060-xx*
11– Shelf Clamps ..... *Qty. 8* *175-5059-xx*
12– PrinterCart Shelf ..... *Qty. 2* ..... *(see below)*
- 24" Wide PrinterCart Shelf *100-6017-xx*
- 36" Wide PrinterCart Shelf *100-6107-xx*

13– 1.5" Small End Caps ..... *Qty. 4* *175-5020-xx*
14– Support Screws ..... *Qty. 8* *325-5010-00*

All Fastener quantities listed here are the minimum needed for your Cart assembly. There may be a few extra Fasteners included, which are not counted in the Parts List.

To make the assembly of your Anthro PrinterCart even easier, we have included all of the required tools (not shown above). The handy Hex Driver Bit can be used in your electric drill in place of the Hex Driver.

Hex Driver 5/32" ..... *Qty. 1* *375-5000-00*
Hex Driver Bit 5/32" ..... *Qty. 1* *375-5003-00*

Anthro Corporation Technology Furniture® 10450 SW Manhasset Drive Tualatin, Oregon 97062

March 2006

SAVE THESE INSTRUCTIONS!

anthro.com

Anthro PrinterCart

Assembly Instructions

Questions? 1-800-325-3841

Step 1

Before proceeding, please review the Assembly Instructions of all Anthro Products you purchased and are planning to include in this installation.

Decide on the shelf configuration that works best for you. Generally, customers place the large shelf at the top of the legs and the small shelf at the bottom of the legs, and that's how these instructions are organized. This configuration leaves 18" clearance between the shelves on the 28" high cart and 10" clearance between the shelves on the 20" high cart.

Shelves can be installed at any height (in 1" increments), so find the best configuration for you. If you need help configuring your cart, just give us a call!

Step 2

Attach four Shelf Supports to each Shelf. Begin by first installing a Shelf Clamp into the Shelf notch. Be sure the pointed barbs face towards the outer Shelf edge.

Next, slide a Shelf Support into the recesses of the Shelf Clamp and Shelf. Push in as far as possible.

Finally, secure with a Clamp Screw.

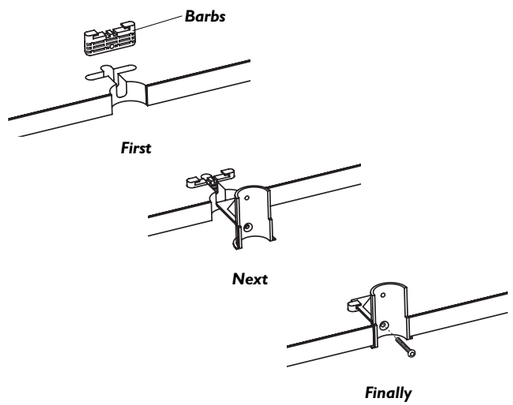

Clamp Screw
325-5086-03

Step 3

Loosely attach a Shelf to the bottom hole *(coped end)* of two Vertical Legs using two Support Screws.

NOTE: This will place your lower Shelf 20" from the floor using the standard 2 $^3/_8$" Casters.

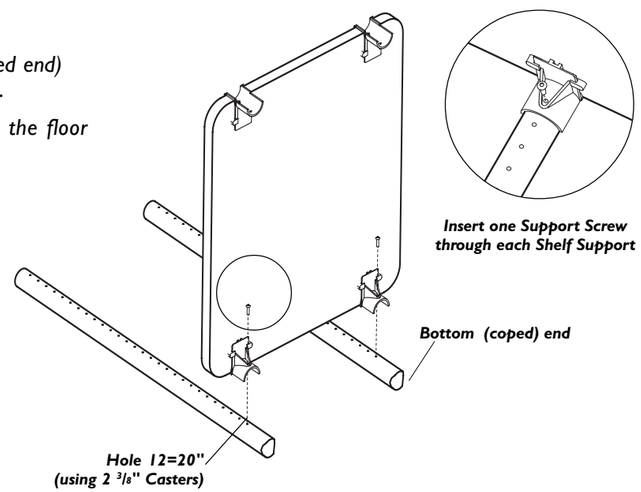

Support Screw
325-5010-00

Step 4

Loosely attach the remaining Shelf to Hole 2 from the top *(non-coped end)* of the Vertical Leg Assembly *(from Step 3)* using two Support Screws.

NOTE: Handle the Shelf Assembly carefully until the Cart is fully assembled.

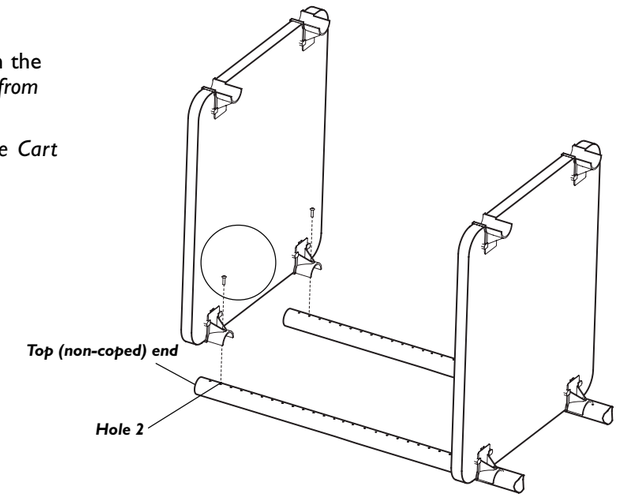

Support Screw
325-5010-00

Step 5

Loosely attach the 3rd and 4th Vertical Legs to the Shelf Assembly *(from Step 4)* using one Support Screw per Shelf Support.

TIP: Use the holes in the Vertical Legs as a ruler to ensure that your Support Screws are installed into the correct locations.

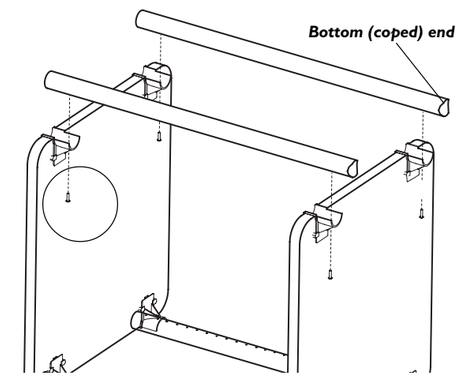

Support Screw
325-5010-00

Step 6

Install all four Caster Inserts into the Base Tube and secure with one Caster Screw per Insert.

Push the Casters, (locking ones in front) into the Caster Inserts.

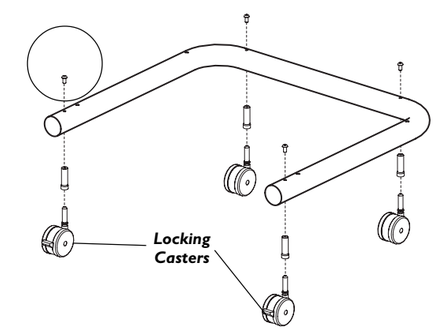

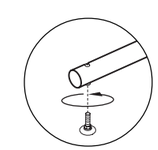

GLIDES ONLY
Thread each Glide into the Glide Inserts

Caster Screw
(small pink patch on end)
325-5052-00