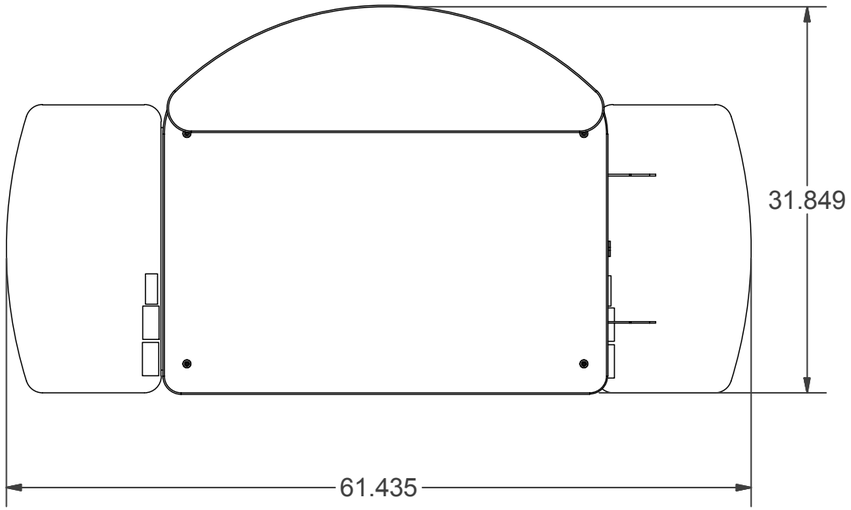

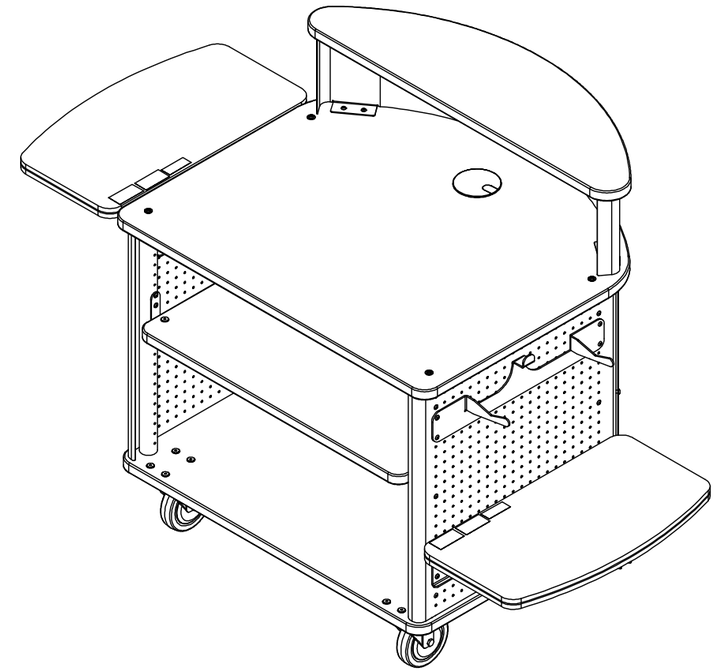

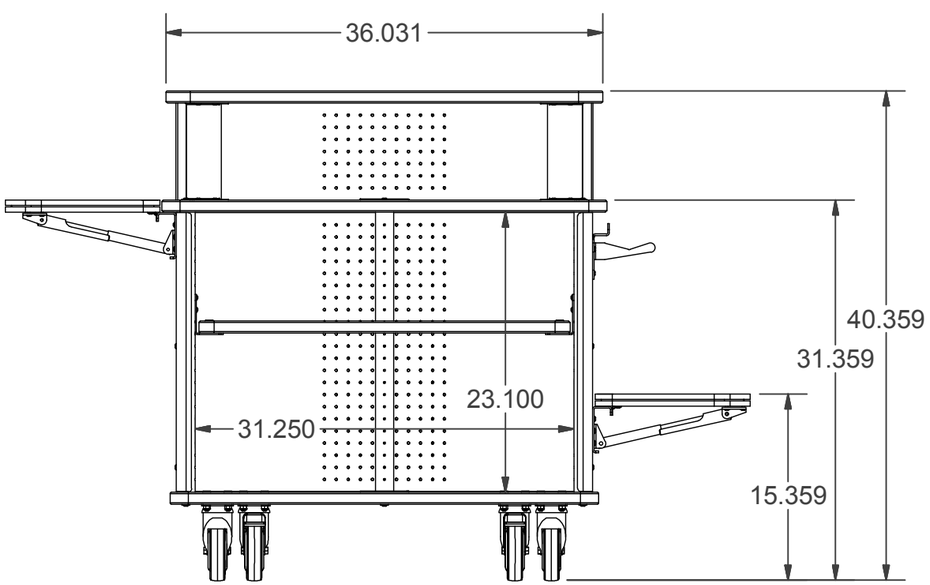

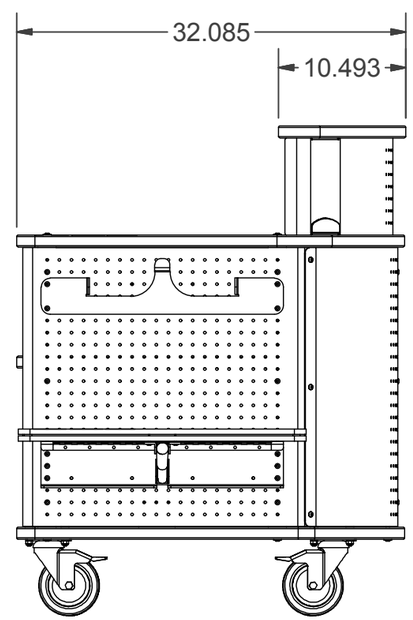

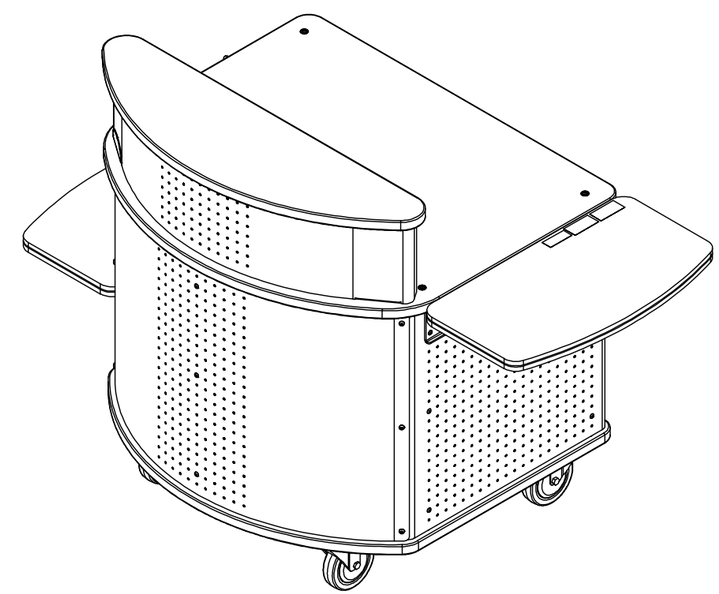

Revisions

Date: 2/22/06	ECO #: 2061
New Rev Level: A	ECO Completed By: JC
Description: Split Breadboard for improved safety	
Date: 3/3/06	ECO #: 2065
New Rev Level: B	ECO Completed By: JC
Description: Replace Rhombus casters with Shepherd casters.	
Date: 4/5/06	ECO #: 2091
New Rev Level: C	ECO Completed By: JC
Description: Reverse caster ECO 2065 (revert to original Rhombus casters).	
Date: 6/22/06	ECO #: 2151
New Rev Level: D	ECO Completed By: JC
Description: Replace Rhombus with Shepherd casters AGAIN!	
Date: 10/25/06	ECO #: 2276
New Rev Level: E	ECO Completed By: JC
Description: Replace slide out shelves with flip up shelves.	
Date: 11/22/06	ECO #: 2307
New Rev Level: F	ECO Completed By: PC
Description: ADD SAFETY LABELS TO BOM	
Date: 12/05/08	ECO #: 2898
New Rev Level: G	ECO Completed By: PC
Description: Add shop about medallion	
Date: 2/15/10	ECO #: 3169
New Rev Level: H	ECO Completed By: DK
Description: Add tab bag holder & 4 screws	
Date: 01/27/10	ECO #: 3156
New Rev Level: I	ECO Completed By: PC
Description: Replace weldment with formed sheet metal	
Date: 07/08/2010	ECO #: 32667
New Rev Level: J	ECO Completed By: MPS
Description: Replace 581-A296-01-03-00 and 225-A302-16-04-FM with 500-1059-00	

PARTS SHOWN NOT TO SCALE

This document contains proprietary information of Anthro Corporation
Copyright 2004 Anthro Corporation
All Rights Reserved

Tolerance	
	.XX ± .025
	.XXX ± .015
	.XXXX ± .0150
	Angular X ± 1°

Technology Furniture
10450 SW Manhasset Dr
Tualatin, OR 97062
Phone (503) 691-2556
Fax (503) 691-8716
anthro.com

Part Description:
Shop About

Anthro Part Number:
CWN4832xx-xx5

Prototype #:

Surface Area: N/A

Material: N/A

Drawn By: Jeremy Conser

Date: 7/12/2005

Rev J