Step 8

Install all four Castor Inserts into the Base Tube and secure with one Castor Screw per Insert.

Push the Castors, (locking ones in front) into the Castor Inserts.

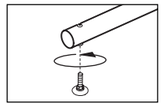

GLIDES ONLY
Thread each Glide into the Glide Inserts

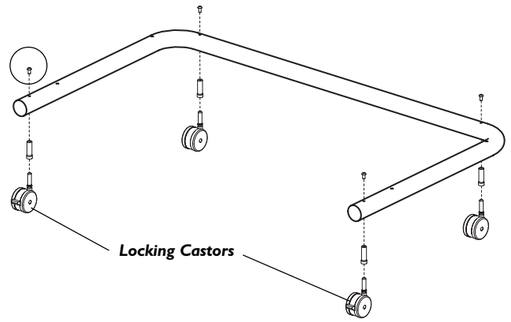

Castor Screw
(small pink patch on end)
325-5052-00

Step 9

Place the Base Tube Assembly (from Step 8) onto the Vertical Legs of the Shelf Assembly (from Step 7).

Attach the Base Tube to the Legs using a total of four Base Tube Screws.

TIGHTEN ALL SCREWS.

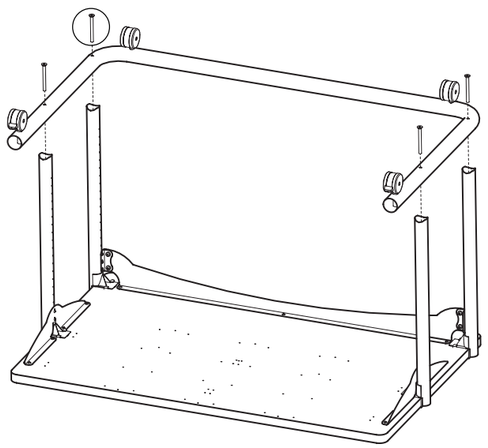

Base Tube Screw
325-5000-00

Step 10

Carefully, rotate your Cart over onto the Castors.

Pop the 1.5" Small End Caps into the Vertical Legs and the 1.75" Large End Caps into the Base Tube.

Congratulations! Your assembly is complete.

Please return the enclosed Registration Card to receive our product updates, new catalogs, and sale flyers.

Thank you for choosing Anthro!

1.5" Small End Cap

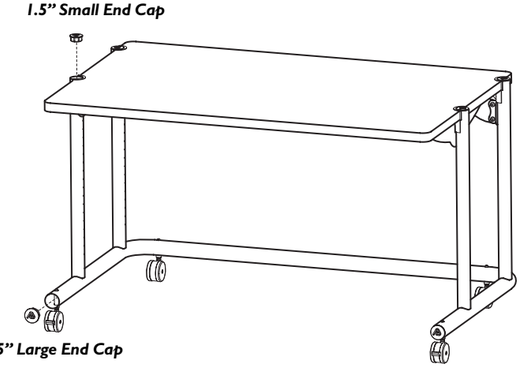

1.75" Large End Cap

300-5067-00

Questions? **1-800-325-3841**

48" Wide AnthroCart

Assembly Instructions

ANTHRO®
TECHNOLOGY FURNITURE®

These Assembly Instructions are for the H12xx & H13xx.

Before beginning assembly of your 48" Wide AnthroCart, please take a moment to review the parts listed below to verify that your shipment is complete.

✔ Does your Cart have 4" Castors?*
(Such as an H12xx4. Your Castor Part Numbers are given here.)

4" Locking Castor
150-5011-03

4" Non-Locking Castor
150-5010-03

✔ Does your Cart have Glides?*
(Such as an H12xxGL. Your Glide and Glide Insert Part Numbers are given here.)

Glide Insert
525-1004-00

Glide
325-5042-00

To make the assembly of your 48" Wide AnthroCart even easier, we have included all of the required tools. The handy Hex Driver Bit can be used in your electric drill in place of the Hex Driver.

Hex Driver 5/32" *375-5000-00*
Hex Driver Bit 5/32" *375-5003-00*
8 oz. Rubber Mallet *375-5022-00*

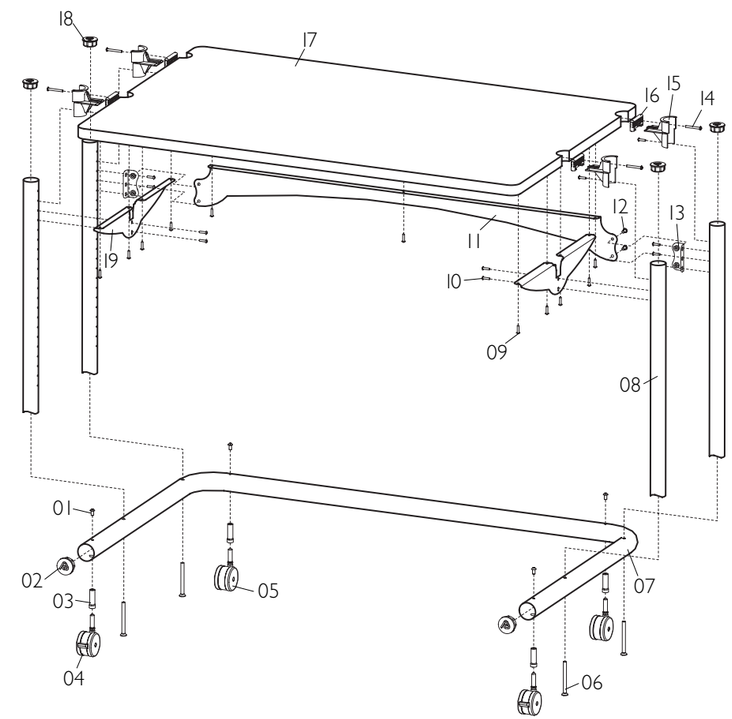

Enclosed Parts List

Detailed views of all Hardware are provided with each Assembly Step.

01– Insert Screws	*Qty. 4*	*325-5052-00*
02– 1.75" Large End Caps	*Qty. 2*	*175-5021-xx*
03– Castor Inserts	*Qty. 4*	*525-1000-00**
04– 2 3/8" Locking Castors	*Qty. 2*	*150-5003-03**
05– 2 3/8" Non-Locking Castors	*Qty. 2*	*150-5002-03**
06– Base Tube Screws	*Qty. 4*	*325-5000-00*
07– 48" Wide Base Tube	*Qty. 1*	*(see below)*
30" Deep Base Tube *(H12xx)*		*125-5175-xx*
36" Deep Base Tube *(H13xx)*		*125-5176-xx*
08– 23.875" Vertical Legs	*Qty. 4*	*125-5020-xx*
09– Wood Screws	*Qty. 11*	*325-5106-00*
10– Support Screws	*Qty. 14*	*325-5010-00*
11– 46" Wide Bridge Pan	*Qty. 1*	*225-5338-xx*
12– Bracket Screws	*Qty. 4*	*325-5149-00*
13– 2.75" Pan End Bracket	*Qty. 2*	*225-5343-xx*
14– Clamp Screws	*Qty. 4*	*325-5086-00*
15– Shelf Supports	*Qty. 4*	*175-5060-xx*
16– Shelf Clamps	*Qty. 4*	*175-5059-xx*
17– 48" Wide Shelf	*Qty. 1*	*(see below)*
30" Deep Shelf *(H12xx)*		*100-6333-xx*
36" Deep Shelf *(H13xx)*		*100-6334-xx*
18– 1.5" Small End Caps	*Qty. 4*	*175-5020-xx*
19– 18" Bridge Side Gussets	*Qty. 2*	*225-5337-xx*

All Screw quantities listed here are the minimum needed for your Cart assembly. There may be a few extra Screws included, which are not counted in the Parts List.

Anthro® Corporation Technology Furniture® 10450 SW Manhasset Drive Tualatin, Oregon 97062

Printed in USA December 2000 Rev. A

SAVE THESE INSTRUCTIONS!

Document # 300-5067-00

48" Wide AnthroCart

Assembly Instructions

Questions? 1-800-325-3841

Step 1

These Instructions will cover both the H12xx & H13xx 48" Wide AnthroCart assembly. ***Before proceeding, please review the Assembly Instructions of all Anthro Products you purchased and are planning to include in this installation.***

These instructions will place your Shelf 28" from the floor using the standard 2 3/8" Castors.

The approximate time to complete the assembly of your 48" Wide AnthroCart is 45 minutes.

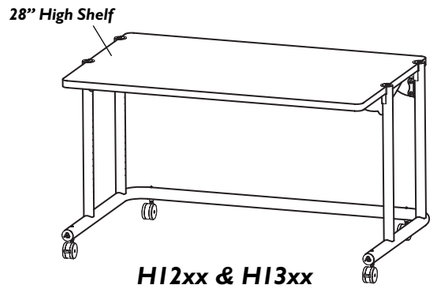

H12xx & H13xx

48"Wide AnthroCart shown with 2 3/8" Castors

Add 1" to overall height for 4" Castors

Subtract 3" from the overall height for Glides

Step 2

Determine the best height for your Shelf. Generally, a 28" high work surface works well for most people and equipment.

For a final Shelf height that is higher or lower than 28", refer to the illustration shown at right to determine which holes to attach your Shelf.

Your Shelf locations may be changed after your Cart has been completely assembled by repeating Steps 5 & 6.

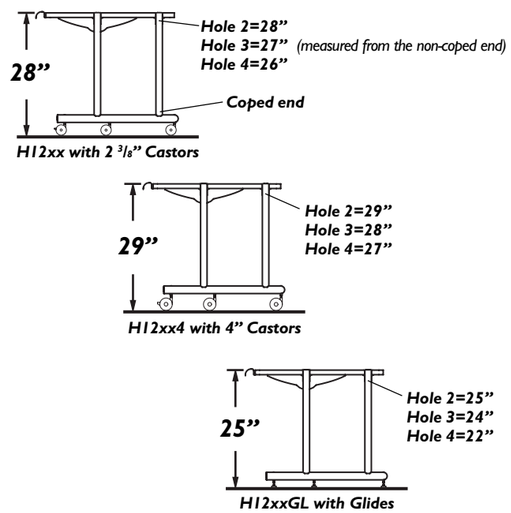

Step 3

Attach all four Shelf Supports to the Shelf.

Begin by first installing a Shelf Clamp into the Shelf notch. Be sure the pointed "Barbs" face towards the outer Shelf edge.

Next, slide a Shelf Support into the recesses of the Shelf Clamp and Shelf. Push in as far as possible.

Finally, secure with a Clamp Screw.

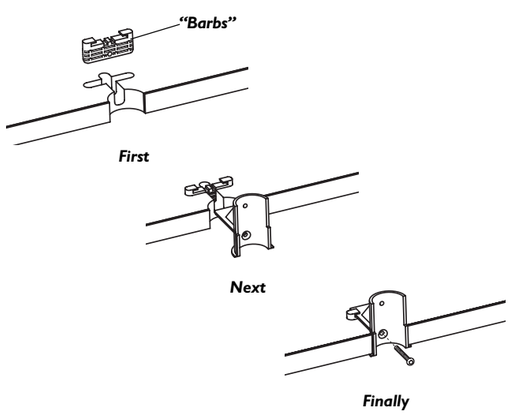

Clamp Screw
325-5086-00

Step 4

Position both Bridge Side Gussets onto the Shelf underside as shown.

Align the predrilled holes on the underside of the Shelf with those on the Gussets and secure into place using a total of four Wood Screws per Gusset.

NOTE: Make certain the Bridge Side Gussets are oriented so the "flanges" face toward the inside of the Cart.

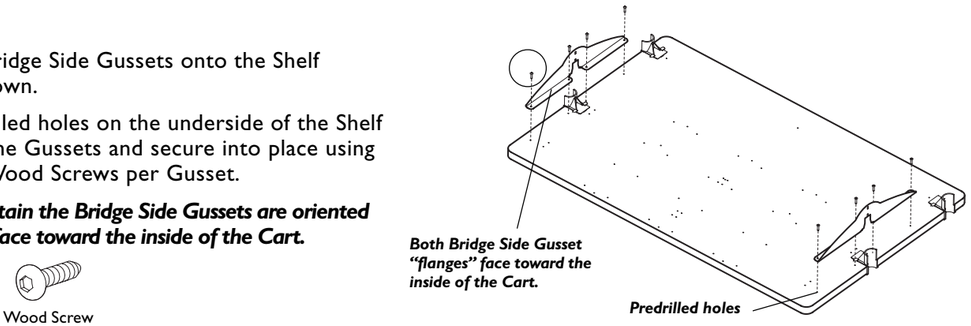

Wood Screw
325-5106-00

Step 5

Attach the "front" Vertical Legs by ***loosely*** installing one Support Screw through a "front" Shelf Support into **Hole 2 from the top (non-coped end)** of a Leg.

Next, ***loosely*** install two Support Screws through a Side Gusset into a corresponding Leg.

Repeat for remaining "front" Vertical Leg and Side Gusset.

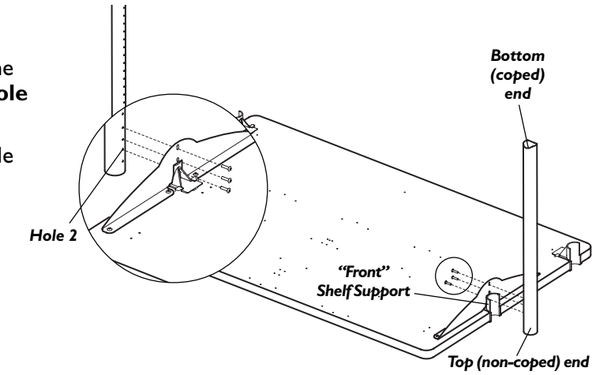

Support Screw
325-5010-00

Step 6

Loosely attach the "rear" Vertical Legs using the same procedure described in Step 5.

Next, position a Pan End Bracket against a "rear" Vertical Leg. Secure into place by ***loosely*** installing three Support Screws through the Bracket into **Holes 3, 4 & 5 from the top** of a 'rear" Leg.

Repeat for remaining "rear" Vertical Leg and Pan End Bracket.

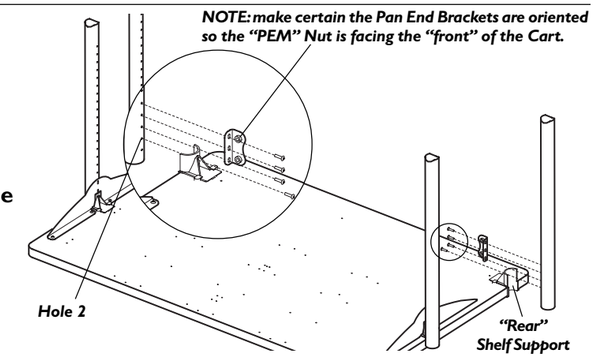

Support Screw
325-5010-00

Step 7

Place the Bridge Pan onto the Shelf between the "rear" Vertical Legs. Secure the Pan to the Shelf by first installing three Wood Screws through the Pan "flange" into the Shelf.

Next, insert a Bracket Screw from the "rear" of the Cart through the Pan and ***carefully*** thread into a Pan End Bracket. Finally, repeat for the remaining Bracket Screws and Pan End Bracket.

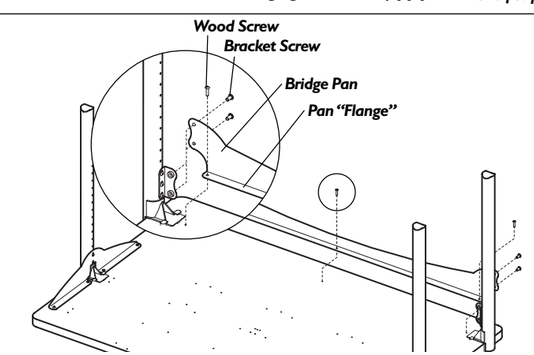

Wood Screw
325-5106-00

1/4-20 X .375" Bracket Screw
325-5149-00

NOTE: tighten all Wood and Bracket Screws after they have ALL have been successfully installed.