ASSEMBLY INSTRUCTIONS

Adjustable Laptop Cart 2

Product	Part#
Adjustable Laptop Cart 2	ALCABK/xx

Anthro Corporation® | 10450 SW Manhasset Dr. | Tualatin, OR 97062
Toll-free: 800.325.3841 | Fax: 800.325.0045 | email: sales@anthro.com | anthro.com
Outside the U.S. | Tel: 503.691.2556 | Fax: 503.691.2409

Rev A - October, 2012

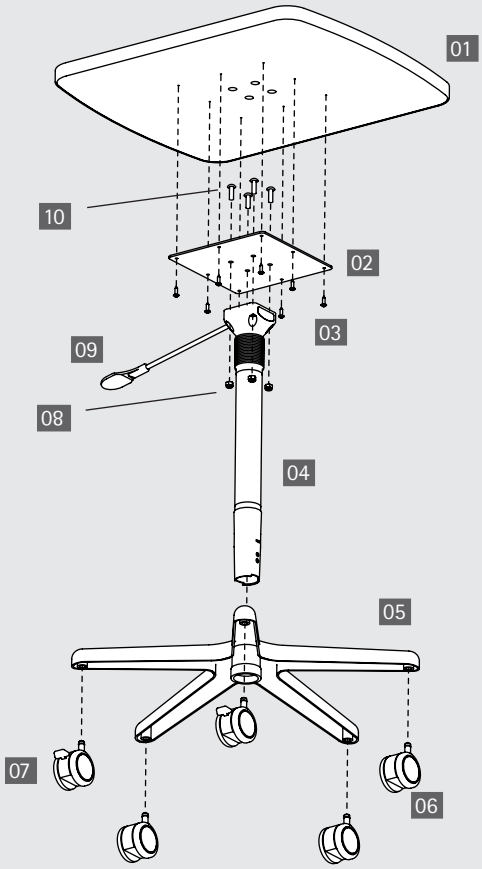

WELCOME

Thank you for purchasing Anthro's Adjustable Laptop Cart 2. If you have any questions or if we can help you in any way, please contact us at 800.325.3841.

TOOLS

These tools are provided for assembly of your Adjustable Laptop Cart 2:

5/32" Anthro hex driver

5/32" hex driver bit

3/16" hex key

PARTS LIST

Before beginning assembly of your cart, please review the parts list to verify that your shipment is complete.

Product		Quantity	Part Number
01	Shelf	1	100-6671-00
02	Shelf Bracket	2	225-4608-00
03	3/4" Wood Screw	8	325-5575-00
04	Column Assembly	1	835-
05	Base	1	175-5181-00
06	Caster, non-locking	2	150-5053-00
07	Caster, locking	3	150-5052-00
08	Lock Nut	4	325-5189-00
09	Lever	1	835-5392-00
10	1" Button-head Cap Screw	4	325-5537-00

STEP 1

Assemble Cart Base and Column

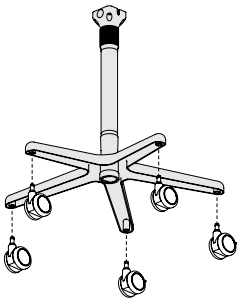

- Insert the casters into the base so that the two locking casters (with tabs) are next to each other.
- Place the base on the floor and lock the two locking casters. Align the column with the base as shown. Push the column into the base.

STEP 2

Install the Adjustment Lever and Shelf Bracket

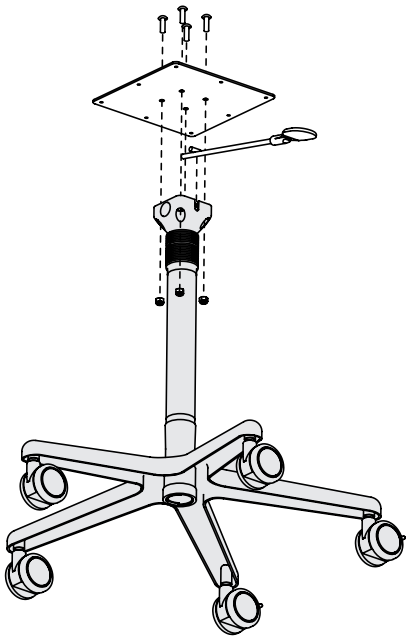

- Align the lever with the top of the column as shown so the lever sets in the slot.
- Set the lever into the top of the column, then cover it with the Shelf Bracket. Align the bracket with the column so the set of four holes at the center of the bracket line up with the four holes at the column.
- One at a time, insert a 1" Button-head Screw through the bracket and into the column, then capture the screw with a Lock Nut. Hold the Lock Nut in place and tighten the screw using the 3/16" hex key provided. Install loosely first, then tighten all.

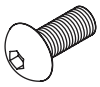

1" Button-head Screw
325-5537-00

Lock Nut
325-5263-00

STEP 3

Attach Shelf to Shelf Bracket

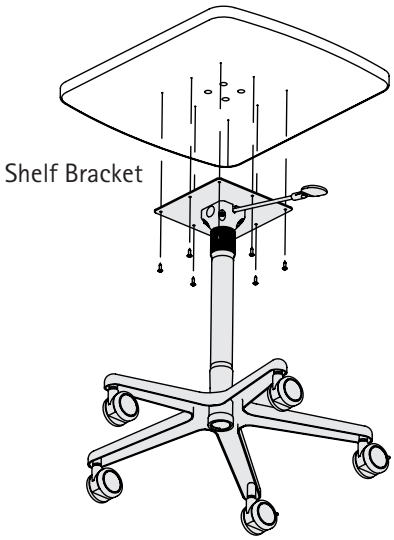

- Align the cart shelf with the shelf bracket so the four screw-heads on the bracket rest in the notches on the bottom of the shelf and the holes along the perimeter of the bracket line up with the pre-drilled holes ont he bottom of the shelf.
- Attach the shelf to the bracket with eight 3/4" Wood Screws using the 5/32" hex Anthro driver.

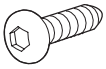

3/4" (#10-9) Wood Screw
325-5575-00

CONGRATULATIONS! YOUR CART ASSEMBLY IS COMPLETE!

Anthro Corporation® | 10450 SW Manhasset Dr. | Tualatin, OR 97062
Toll-free: 800.325.3841 | Fax: 800.325.0045 | email: sales@anthro.com | anthro.com
Outside the U.S. | Tel: 503.691.2556 | Fax: 503.691.2409

300-5574-00

Warranty:
The Adjustable Laptop Cart 2 has a Lifetime Warranty against manufacturing defects; 5-year warranty on the cylinder.

Notices:
Technology Furniture is a trademark of Anthro Corporation. Anthro reserves the right to modify the design and specifications without prior notice.