ASSEMBLY INSTRUCTIONS

Convoi® Base Unit

Product	Part#
24"w Base Unit Standard	BU24STSM/BF
24"w Base Unit Tall	BU24TLSM/BF
24"w Base Unit Extra Tall	BU24XTSM/BF

Product	Part#
30"w Base Unit Standard	BU30STSM/BF
30"w Base Unit Tall	BU30TLSM/BF
30"w Base Unit Extra Tall	BU30XTSM/BF

NOTE: The Cap Shelf and End Cap accessories shown are not included.

ANTHRO®
Technology Furniture®
– Fast and Friendly!

Anthro Corporation® | 10450 SW Manhasset Dr. | Tualatin, OR 97062
Toll-free: 800.325.3841 | Fax: 800.325.0045 | email: sales@anthro.com | anthro.com
Outside the U.S. | Tel: 503.691.2556 | Fax: 503.691.2409

December 2010, Rev G

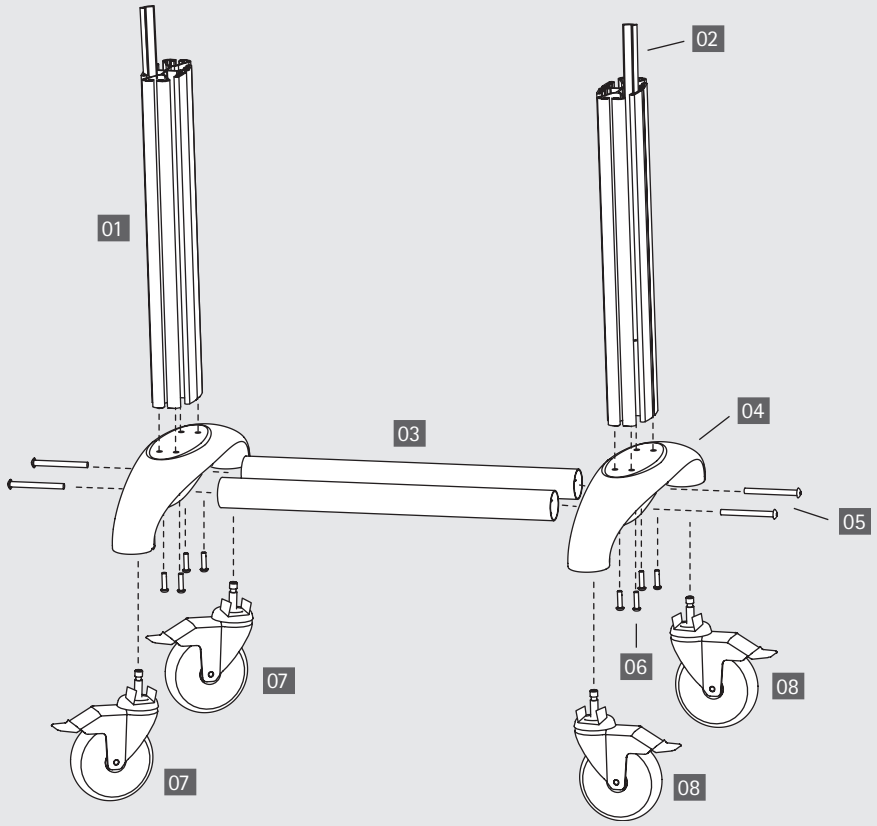

WELCOME

Thank you for purchasing Convoi®!

This instruction covers the assembly for Convoi base units, but does not cover other components. Please review all the instructions before beginning any assembly to determine the best sequence. Check the Assembly Sequence note on each assembly instruction for help making that determination.

If you have any questions or if we can help you in any way, please contact us at 800.325.3841.

NOTES

Use a power driver/drill with appropriate bits to make it easier on yourself.

Fastener quantities listed here are the minimum required for this assembly. You may receive a few extras which are not counted on the Parts List.

PARTS LIST

Before beginning assembly of your Convoi Base Unit, please review the parts list to verify that your shipment is complete.

Component		Quantity	Part Number
01	19.5" Leg Column (for Standard Cart)	2	280-3035-00
01	25.5" Leg Column (for Tall Cart)	2	280-3036-00
01	31.5" Leg Column (for Extra Tall Cart)	2	280-3046-00
02	Rubber Cable Blade	4	175-5215-00
03	24" Cross Tube (for 24" wide Cart)	2	125-5285-23
03	30" Cross Tube (for 30" wide Cart)	2	125-5292-23
04	Foot	2	250-5028-00
05	5/16-18 x 3.5" Bolt	4	325-5194-00
06	1/4-20 x 3/4" Cap Screw	8	325-5264-00
07	5" Total Lock Caster (silver tab)	2	150-5062-00
08	5" Swivel Lock Caster (green tab)	2	150-5063-00
09	5/32" Hex Driver (not shown)	1	375-5000-00
10	3/16" Allen Key (not shown)	1	375-5028-00

STEP 1

Connect the Foot to the Leg Column

- Attach one foot to the bottom of the leg column using four cap screws. Loosely install each screw then tighten them all.
- Repeat for the second leg column.

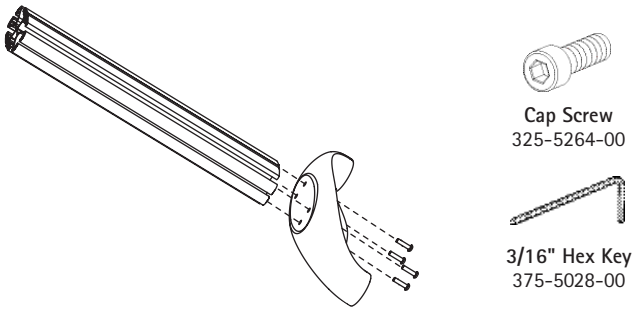

STEP 2

Attach the Casters

- Depress the tab on the green-tabbed Swivel Lock Casters. While holding the top of the caster, rotate the wheel until it clicks into the locked position. This locks the swivel and makes the caster easier to install.
- Install the two Swivel Lock Casters into the same foot by shoving the caster stem into the hole.
- Install the two Total Lock Casters (silver tab) onto the second foot.

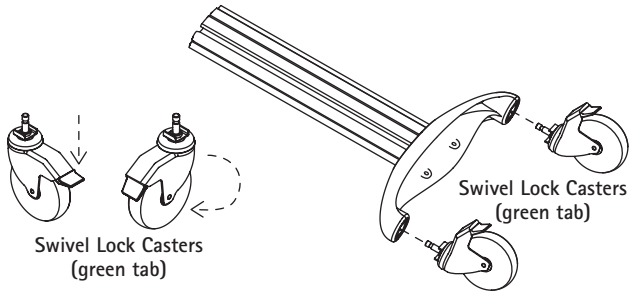

STEP 3

Install the Cross Tubes

- Align one cross tube with one leg assembly so one hole on the leg assembly lines up with one end of a cross tube. Using the Anthro driver, loosely attach the cross tube to the leg assembly with a bolt. Loosely attach that cross tube to the other leg assembly
- Repeat to install the second cross tube. Once all four bolts are installed, tighten them all the way.

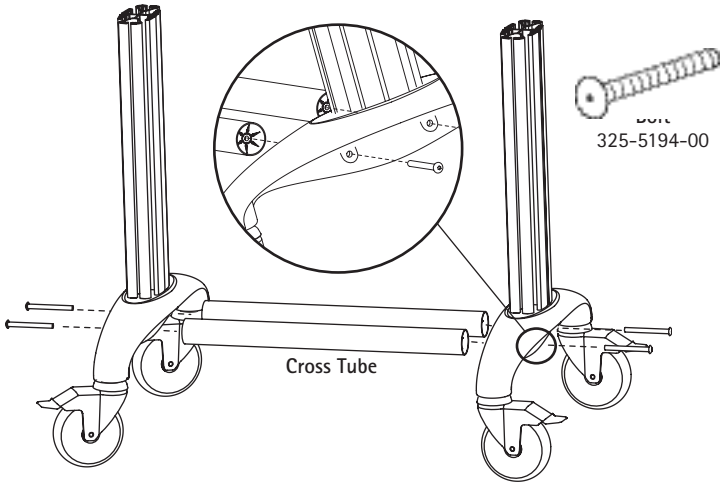

STEP 4

Relocate the Cable Blade

- The Cable Blades come installed in your Convoi legs. If you'd like to move them, first lubricate them with dish soap or another lubricant, then pull them out gently. (Grab them with pliers if that helps.) Reinstall as desired.

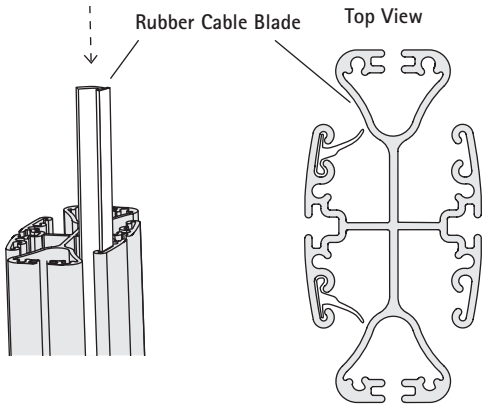

CONGRATULATIONS! YOUR ASSEMBLY IS COMPLETE!

Next, review the Assembly Sequence notes on each Convoi accessory instruction to determine your next step.

ANTHRO®

Technology Furniture®
– Fast and Friendly!

Anthro Corporation® | 10450 SW Manhasset Dr. | Tualatin, OR 97062
Toll-free: 800.325.3841 | Fax: 800.325.0045 | email: sales@anthro.com | anthro.com
Outside the U.S. | Tel: 503.691.2556 | Fax: 503.691.2409

300-5362-00

Warranty:
For warranty information, please visit: http://www.anthro.com/support/warranty

Notices:
Technology Furniture and Convoi are trademarks of Anthro Corporation. Anthro reserves the right to modify the design and specifications without prior notice.