ASSEMBLY INSTRUCTIONS

Zido® Cart

Product	Part#
Zido Carts	ZD2231SB/CG4
	ZD2235SB/CG4
	ZD2240SB/CG4
	ZD2531SB/CG4
	ZD2535SB/CG4
	ZD2540SB/CG4
	ZD2166SB/CG4
Zido Pole Cart	ZD2166SB4

ANTHRO®
Technology Furniture®
– Fast and Friendly!

Anthro Corporation® | 10450 SW Manhasset Dr. | Tualatin, OR 97062
Toll-free: 800.325.3841 | Fax: 800.325.0045 | email: sales@anthro.com | anthro.com
Outside the U.S. | Tel: 503.691.2556 | Fax: 503.691.2409

Rev H, January 2011

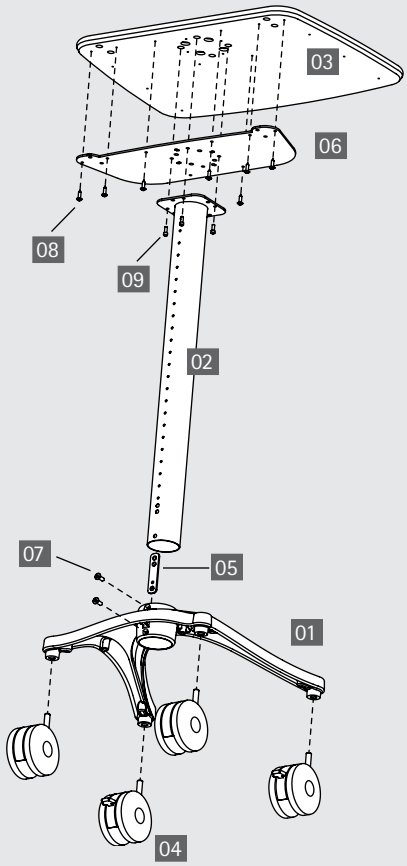

WELCOME

Thank you for purchasing Zido. If you have any questions or if we can help you in any way, please contact us at 800.325.3841.

PARTS LIST

Before beginning assembly of your Zido cart please review the parts list to verify that your shipment is complete.

All Screw quantities listed here are the minimum needed for your Zido assembly. There may be a few extra Screws included which are not counted in the Parts List.

To make the assembly of your Zido even easier, we have included the required tools. The handy Hex Driver Bit can be used in your electric drill in place of the Hex Driver.

Product	Quantity	Part Number
Hex Driver 5/32" (not shown)	1	375-5000-00
Hex Driver Bit 5/32" (not shown)	1	375-5003-00

Zido Cart	Quantity	Part Number
01 Base		
Small, 22" wide	1	250-3064-00
Large, 25" wide	1	250-3065-00
02 Tube		
24" long (for 31" high cart)	1	500-1031-00
28" long (for 35" high cart)	1	500-1030-00
33" long (for 40" high cart)	1	500-1032-00
03 Cap Shelf		
22" wide	1	101-1025-06-50
25" wide	1	101-1026-06-50
04 Casters		
4" Locking	2	150-5011-03
4" Non-locking	2	150-5010-03
05 Tapped Strip	1	225-2621-00
06 Cap Shelf Bracket	1	225-2620-00
07 3/4" Flat Head Screw	2	325-5466-00
08 Wood Screws	8	325-5106-00
09 1/2" Socket Head Cap Screw	4	325-5455-00

Zido Pole Cart	Quantity	Part Number
01 Base	1	250-3065-00
02 Tube	1	125-4324-00
04 Casters		
4" Locking	2	150-5011-03
4" Non-locking	2	150-5010-03
05 Tapped Strip	1	225-2621-00
3/4" Socket Head Cap Screw (not shown)	2	325-5461-00
End Cap (not shown)	1	175-5235-00

ASSEMBLY SEQUENCE

Plan out the assembly to make your installation easier. We suggest this sequence to reduce interference between accessories.

1. Pre-drill the top for accessories (Mouse Holder, Side Bin, Gel Cup/Probe Holder, Extension Tube).
2. Assemble the cart.
3. Base Storage Shelf.
4. Drawer, Keyboard Drawer, Handle.
5. Additional Shelves, Equipment Shelves, Metal Bin, IV bracket.
6. Cable Bin, Glove Box Holder, Tank Holder.
7. Mouse Holder, Side Bin, Gel Cup & Probe Holder, Extension Tube.
8. Pole Cart Handle, Flat Panel Mounts.

STEP 1

Connect the Base with the Tube

- Slide the nut bar into the bottom of the base assembly, smooth side against the inside of the tube, with the two threaded holes on the top and the single threaded hole at the bottom. Loosely attach the nut bar to the tube with one 3/4" Flat Head Screw.
- Slide the tube into the base so that the notch at the bottom of the tube goes over the screw. Align the upper hole on the base with a threaded hole on the nut bar. (For the 25w cart and the Pole Cart, you'll use the top hole; for the 22w cart, you'll use the second hole.) Loosely attach the nut bar, tube, and base with the second 3/4" Flat Head Screw.

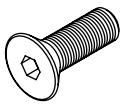

3/4" Flat Hd Screw
325-5466-00

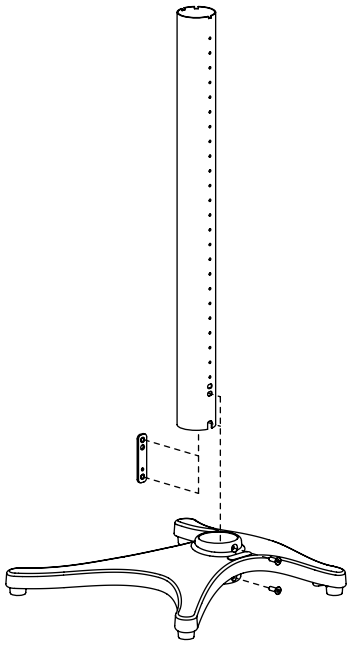

STEP 2

Install the Casters

- Add the locking casters (the ones with the brakes) to the front of the base assembly.
- Add the non-locking casters to the back of the base assembly. If you have a Fixed-height Cart, skip ahead to Step 3.
- If you have a Zido Pole Cart, make sure that the holes on the column line up with the holes on the base and tighten the screws. Next, insert the End Cap in the top of the Pole. Congratulations! Your assembly is complete!

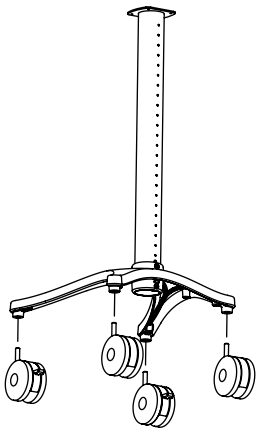

STEP 3

Assemble the Top

- Place the cap shelf upside down on a non-marring surface. Locate the bracket. The bottom of the bracket is flat and has no sticker. The top of the bracket has a sticker that says "TOP" and has bumps with threads inside. The bumps on the top of the bracket nest inside the holes on the cap shelf. Place the bracket upside down on the shelf so that the holes on the bracket line up with the holes on the bottom of the shelf. Using the eight non-threaded holes around the outside of the bracket, attach the shelf to the bracket with eight wood screws. Use the 5/32" hex driver.
- If you have purchased a Zido Handle for this configuration, install it now. If any of your accessories require that you drill the shelf, do that now.

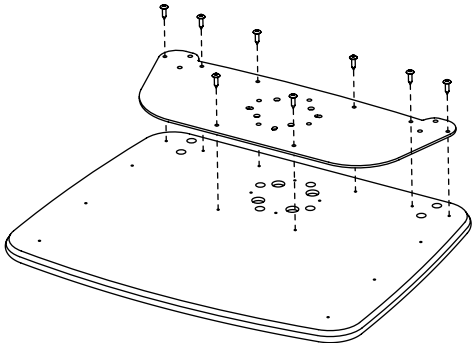

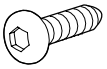

3/4" Wood Screw
325-5106-00

STEP 4

Install the Top Assembly

- Set the top assembly onto the top of the base assembly so that the cap shelf extends over the front of the base.
- Secure with four 1/2" socket head screws. Be sure to drive the screws by hand using the ball driver provided.
- Double-check the alignment of the cap shelf with the column and the base. Rotate the column if needed, then tighten the 3/4" screws that connect the column to the base.

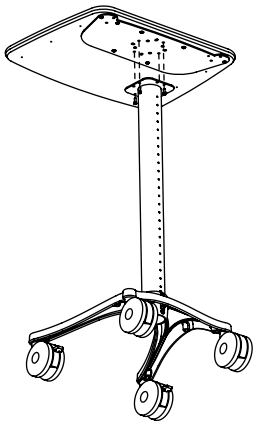

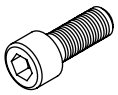

1/2" Socket Hd Screw
325-5455-00

CONGRATULATIONS! YOUR ZIDO CART ASSEMBLY IS COMPLETE!

Anthro Corporation® | 10450 SW Manhasset Dr. | Tualatin, OR 97062
Toll-free: 800.325.3841 | Fax: 800.325.0045 | email: sales@anthro.com | anthro.com
Outside the U.S. | Tel: 503.691.2556 | Fax: 503.691.2409

300-5404-00

Warranty:
Zido carts have a Lifetime Warranty; the cylinder has a five-year warranty.

Notices:
Technology Furniture and Zido are trademarks of Anthro Corporation. Anthro reserves the right to modify the design and specifications without prior notice.

ANTHRO®
Technology Furniture®
– Fast and Friendly!