Step 8

Install all four Caster Inserts into the Base Tube and secure with one Insert Screw per Insert. Push the Casters, *(locking ones in front)* into the Caster Inserts.

Next, place the Base Tube Assembly onto the Vertical Legs of the Shelf Assembly. Attach the Base Tube to each Leg using a total of four Base Tube Screws.

Insert Screw
(small pink patch on end)
325-5052-00

Base Tube Screw
325-5000-00

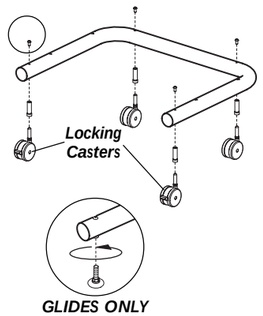

NOTE: The Rubber Bumper is located towards the rear of the Cart

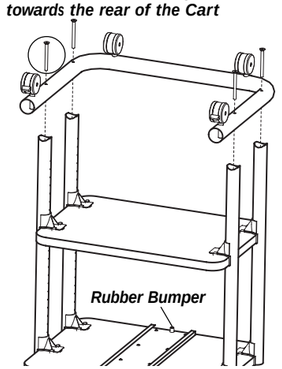

Step 9

Unpack the remaining Keyboard & Mouse Caddy items.

First, slide the Caddy Mechanism into the installed Tray and push to the rear.

NOTE: If needed, rotate the Mechanism Handle and LIFT to allow the Mechanism to slide to the rear.

Second, install the remaining Wood Screw and Rubber Bumper into the front of the Tray.

3/4" Wood Screw
325-5106-00

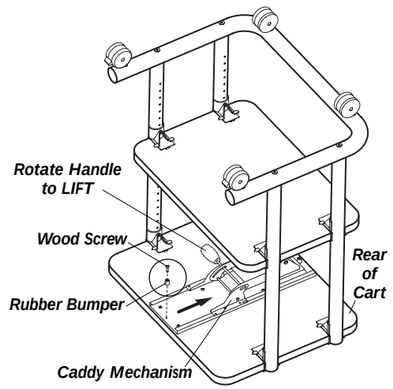

Step 10 (requires the Crescent Wrench & Screwdriver)

Carefully rotate your Cart back onto the Casters.

Pull the Mechanism to the front and place the Platform onto the Mechanism. Secure the Platform using the four Caddy Screws and Acorn Nuts.

Then, place the Mouse Rail, Pad & Wrist Rest onto the Platform as best suits your personal preference.

Pop the Small End Caps into the Legs and the Large End Caps into the Base Tube. **Congratulations!** Your assembly is complete.

(#10-24) Caddy Screw
575-5001-10

(#10-24) Acorn Nut
325-5023-00

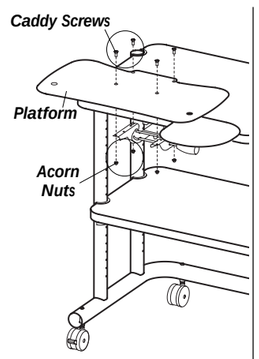

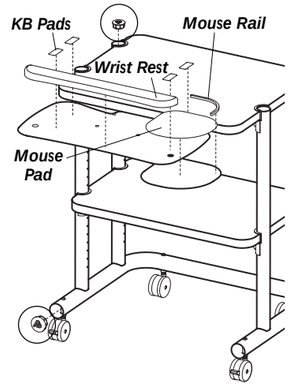

Adjusting your Keyboard & Mouse Caddy

Adjust the Platform height & angle:

1. Rotate the Handle counterclockwise.
2. Reposition the Shelf, then retighten the Handle.

Adjust the Platform rotation:

1. Firmly grasp the Platform, then rotate to the desired angle.

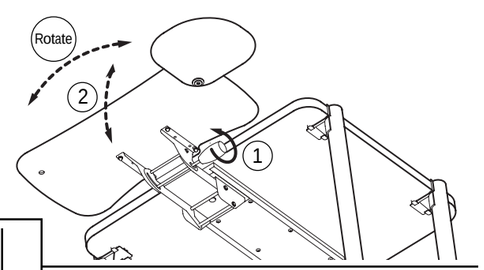

300-5046-00

Questions? **1-800-325-3841**

UltraCompact Cart

Assembly Instructions

ANTHRO®
TECHNOLOGY FURNITURE®

Hello! Thank you for choosing Anthro.

Before beginning assembly of your UltraCompact Cart, please take a moment to review the parts listed below to verify that your shipment is complete.

It may be helpful to review the assembly instructions of all Anthro products you purchased and are planning to include in this installation.

A Philips Head Screwdriver & Adjustable Crescent Wrench *(not included)* will be required for this assembly.

Does your Cart have 4" Casters?*
(Such as a 075xx4. Your Caster Part Numbers are given here.)

4" Locking Caster
150-5011-00

4" Non-Locking Caster
150-5010-00

Does your Cart have Glides?*
(Such as a 075xxGL. Your Glide and Glide Insert Part Numbers are given here.)

Glide Insert
525-1004-00

Glide
325-5042-00

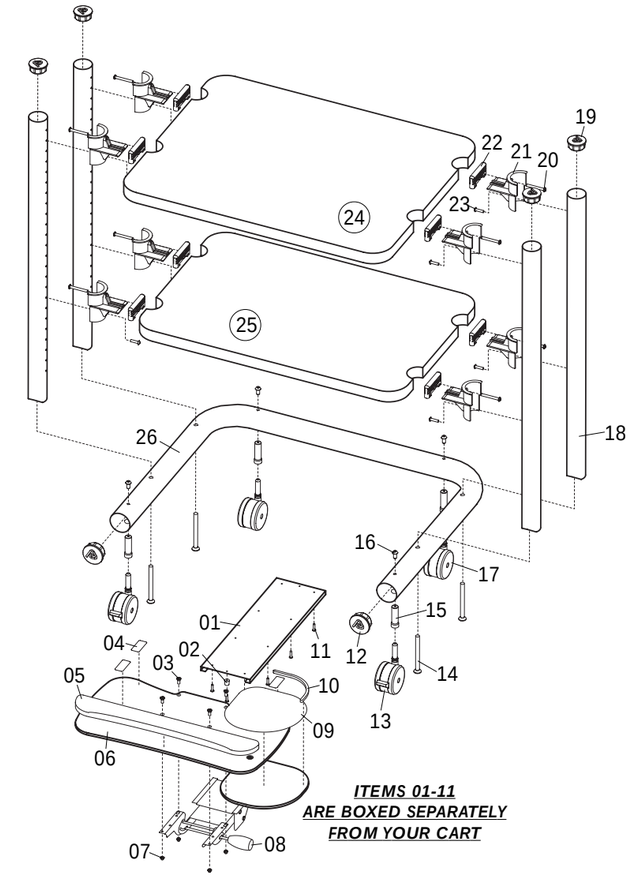

Component list for part # 075xx , 075Lxx

01– Caddy Tray	Qty. 1	225-5046-00	
02– Rubber Bumpers	Qty. 2	175-5130-03	
03– Caddy Screws	Qty. 4	575-5001-10	
04– Keyboard Pads	Qty. 4	575-5001-11	
05– Wrist Rest	Qty. 1	575-5001-01	
06– Caddy Platform	Qty. 1	575-5001-04	
07– Acorn Nuts	Qty. 4	325-5023-00	
08– Caddy Mechanism	Qty. 1	575-5001-09	
09– Mouse Pad	Qty. 1	575-5001-03	
10– Mouse Rail	Qty. 1	575-5001-02	
11– 3/4" Wood Screws	Qty. 10	325-5106-00	
12– 1.75" Large End Caps	Qty. 2	175-5021-xx	
13– 2 3/8" Locking Casters	Qty. 2	150-5003-00*	
14– Base Tube Screws	Qty. 4	325-5000-00	
15– Caster Inserts	Qty. 4	525-1000-00*	
16– Insert Screws	Qty. 4	325-5052-00	
17– 2 3/8" Non-Locking Casters	Qty. 2	150-5002-00*	
18– Vertical Legs	Qty. 4	125-5049-xx	
19– 1.5" Small End Caps	Qty. 4	175-5020-xx	
20– Clamp Screws	Qty. 8	325-5086-03	
21– Shelf Supports	Qty. 8	175-5060-xx	
22– Shelf Clamps	Qty. 8	175-5059-xx	
23– Support Screws	Qty. 8	325-5010-00	
24– Ultra Compact Large Shelf	Qty. 1	100-6001-xx	
25– Ultra Compact Small Shelf	Qty. 1	100-6005-xx	
26– Ultra Compact Base Tube	Qty. 1	125-5046-xx	

All Screw quantities listed here are the minimum needed for your Cart assembly. There may be a few extra Screws included, which are not counted in the Parts List.

The following Tools (not shown) have been included with your Cart.

Hex Driver 5/32"	Qty. 1	375-5000-00
Hex Driver Bit 5/32"	Qty. 1	375-5003-00

Ultra Compact Cart

Assembly Instructions

Questions? 1-800-325-3841

Step 1

Before proceeding, please review the Assembly Instructions of all Anthro Products you purchased and are planning to include in this installation.

These Instructions will cover both the Ultra Compact Cart and Universal Keyboard & Mouse Caddy assembly.

You may disregard the Keyboard & Mouse Caddy Instructions that came in the separate packaging.

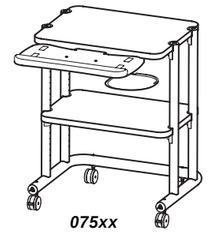

075xx
Ultra Compact Cart shown with the Universal Keyboard & Mouse Caddy and 2 3/8" Casters (075Lxx available with Mouse Caddy on left)

Step 2

Determine the best location for your Cart's Shelves.

Your Cart is designed to have the Large Shelf installed above the Small Shelf *(as shown in these instructions).*

For a Small Shelf location that is higher or lower than 16" from the floor, refer to the illustrations shown at right to determine which hole to attach your Small Shelf.

Once assembled, it is very difficult to move a Shelf without taking the Cart apart and starting over.

NOTE: These instructions will place your Small Shelf 16" from the floor using the standard 2 3/8" Casters.

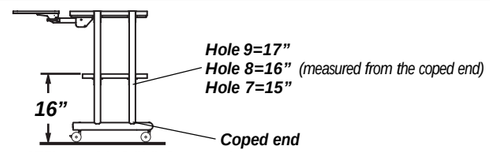

075xx, 075Lxx with 2 3/8" Casters shown

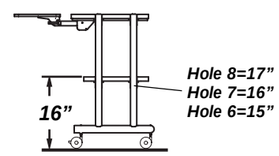

075xx4, 075Lxx4 with 4" Casters shown

REMINDER: You may want to measure your equipment to make sure it fits between the selected Shelf locations.

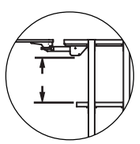

DON'T FORGET: The Keyboard Caddy will require additional space between the Shelves in order to fully slide to the back of the Tray.

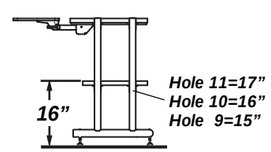

075xxGL, 075LxxGL with Glides shown

Step 3

Attach four Shelf Supports to both Shelves.

Begin by first installing a Shelf Clamp into the Shelf notch. Be sure the pointed "barbs" face towards the outer Shelf edge.

Slide a Shelf Support into the recesses of the Shelf Clamp and Shelf. Push in as far as possible.

Secure with a Clamp Screw.

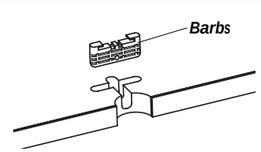

First

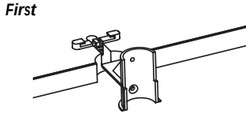

Next

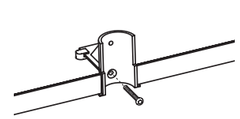

Last

Clamp Screw
325-5086-03

Step 4

Unpack the Universal Keyboard & Mouse Caddy items.

Align the ten Caddy Tray holes with those on the underside of your Cart's Large Shelf. Secure the Tray using eight Wood Screws *(installed on the edges of the Tray).*

Finally, insert one Wood Screw through a Rubber Stop and install the Stop towards the "rear" of your Cart.

NOTE: One hole will be left open.

1/2" Wood Screw
325-5106-00

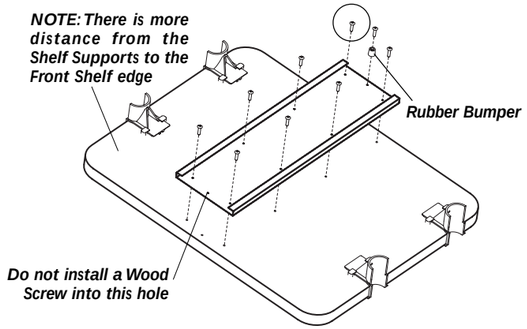

Step 5

Loosely attach the Small Shelf to Hole 8 from the bottom *(coped end)* of two Vertical Legs using two Support Screws.

NOTE: Handle the Shelf Assembly carefully until the Cart is fully assembled.

Support Screw
325-5010-00

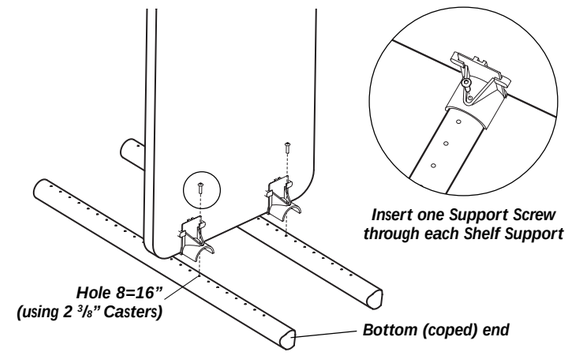

Step 6

Loosely attach the Large Shelf to Hole 2 from the top *(non-coped end)* of the Vertical Leg Assembly *(from Step 5)* using two Support Screws.

TIP: Use the holes in the Vertical Legs as a ruler to ensure that your Support Screws are installed into the correct locations.

Support Screw
325-5010-00

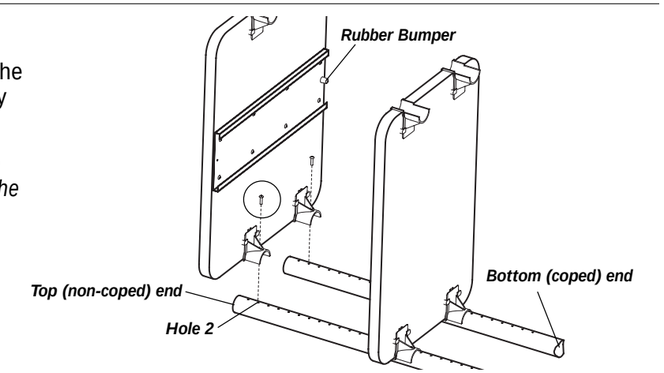

Step 7

Loosely attach the 3rd and 4th Vertical Legs to the Shelf Assembly *(from Step 6)* using one Support Screw per Shelf Support.

Once all four Vertical Legs are attached, tighten all Support Screws.

TIP: Use the holes in the Vertical Legs as a ruler to ensure that your Support Screws are installed into the correct locations.

In preparation for Step 8, rotate your Cart upside down.
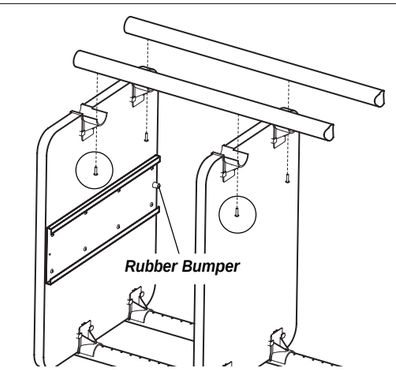
Support Screw
325-5010-00