ASSEMBLY INSTRUCTIONS

Elevate™, Electric Lift Table

Product	Part#
36"w Single Surface	ELTA136zz/xx4
48"w Single Surface	ELTA148zz/xx4
60"w Single Surface	ELTA160zz/xx4
72"w Single Surface	ELTA172zz/xx4

ANTHRO®
Technology Furniture®
– Fast and Friendly!

Anthro Corporation® | 10450 SW Manhasset Dr. | Tualatin, OR 97062
Toll-free: 800.325.3841 | Fax: 800.325.0045 | email: sales@anthro.com | anthro.com
Outside the U.S. | Tel: 503.691.2556 | Fax: 503.691.2409

September 2010, Rev D

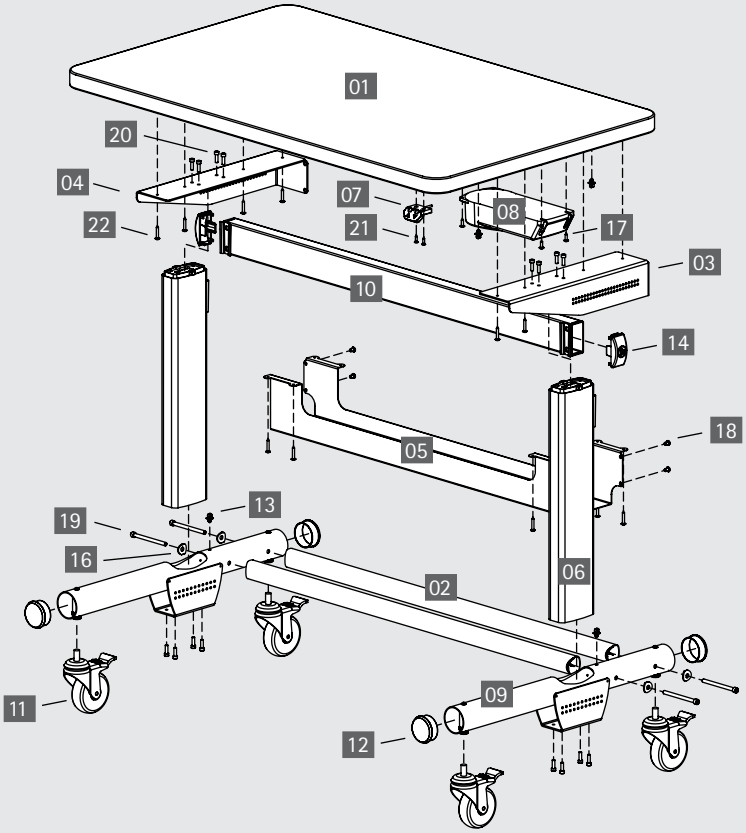

WELCOME

Thank you for purchasing Elevate,™ Electric Lift Table! If you have any questions or if we can help you in any way, please contact us at 800.325.3841.

This assembly requires two people.

PARTS LIST

Before beginning assembly of your Table, please take a moment to review the parts listed below to verify that your shipment is complete.

A Phillips head screwdriver is required for this assembly.

	Product	Quantity	Part Number
01	Shelf		
	36"w Elevate	1	100-6577-xx
	48"w Elevate	1	100-6578-xx
	60"w Elevate	1	100-6579-xx
	72"w Elevate	1	100-6580-xx
02	Cross Tube		
	36"w Elevate	1	125-5277-zz
	48"w Elevate	1	125-5184-zz
	60"w Elevate	1	125-5185-zz
	72"w Elevate	1	125-5186-zz
03	Shelf Gusset (X)	1	225-2269-zz
04	Shelf Gusset (Y)	1	225-2270-zz
05	Cableway		
	36"w Elevate	1	225-2281-zz
	48"w Elevate	1	225-2282-zz
	60"w Elevate	1	225-2283-zz
	72"w Elevate	1	225-2284-zz
06	Leg	2	575-5018-zz
07	Keypad Assembly	1	
	Keypad		400-5357-00
	Keypad Slider		400-5358-00
08	Control Box	1	400-5393-00
09	Basetube	2	500-1005-zz
10	Cross Tube		
	36"w Elevate	1	500-1007-zz
	48"w Elevate	1	500-1008-zz
	60"w Elevate	1	500-1009-zz
	72"w Elevate	1	500-1010-zz
11	4" Locking Caster	4	150-5065-00
12	Basetube End Cap	4	175-5158-32
13	Wire Management Clip	3	175-5188-00
14	Crosstube End Cap	2	175-5190-32
15	Velcro Tie (not shown)	2	175-5121-03
16	Basetube Washer	4	
	Black		225-2050-00
	Silver Metallic		225-3522-00
17	3/4" Wood Screw	4	325-5106-00
18	3/8" Button Head Cap Screw	4	325-5149-00
19	4" Cap Screw	4	325-5166-00

(CONTINUED NEXT PAGE)

PARTS LIST (CONTINUED)

	Product	Quantity	Part Number
20	20mm Socket Head Cap Screw	16	325-5272-00
21	3/4" Phillips Screw	4	325-5370-00
22	1-1/4" Button Head Screw	16	325-5178-00
23	Hex Driver (not shown)	1	375-5000-00
24	1/4" Hex Key (not shown)	1	375-5024-00
25	Rubber Mallet (not shown)	1	375-5022-00
26	5mm Hex Key (not shown)	1	375-5014-00
27	5/32" Hex Driver Bit (not shown)	1	375-5003-00
28	10' Power Cord (not shown)	1	400-5181-00

	Product	Quantity	Part Number
	For 36" and 48" wide Elevates		
29	1-meter Control Box Cable (not shown)	2	400-5182-00
	For 60" and 72" wide Elevates		
30	1-meter Control Box Cable (not shown)	1	400-5182-00

STEP 1

Attach the Legs to the Base Tubes

- Hold one leg so the Slot is facing away from you and the cord is coming out the top. Route the leg cord through the notch on the top. Using the mallet, firmly attach the cord grommet to the notch. Make sure that one leg has the cord on the left and one leg has the cord on the right.
- Align a leg with the opening on the base tube so that the slot on the legs is facing the hole on the base tube and that the cord comes out the top.
- Attach with four Socket Head Cap Screws.
- Repeat for the second leg.

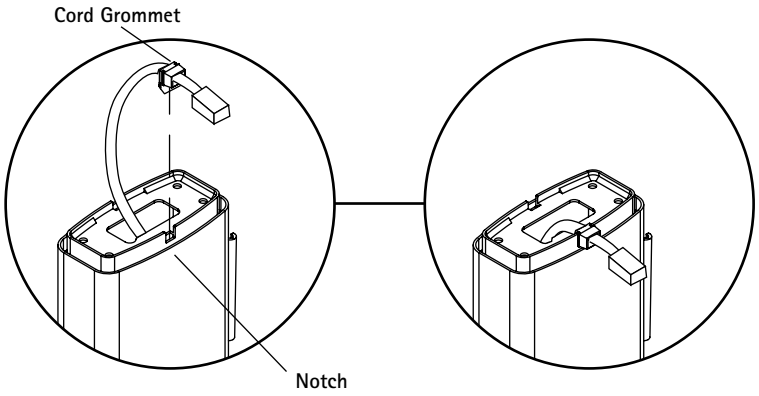

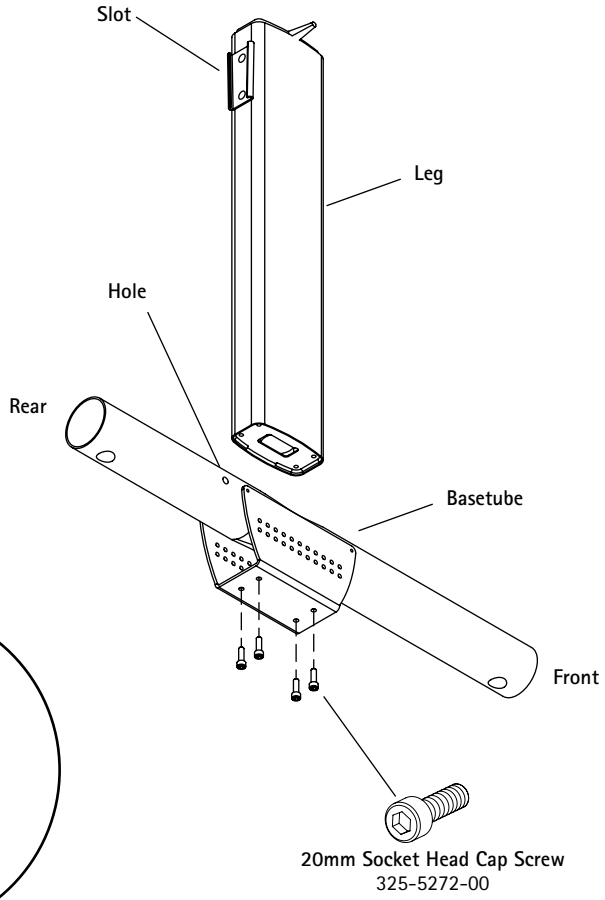

STEP 2

Attach Gusset to Legs

- Attaching a gusset to a leg determines an outside and inside for the leg. The flange on the side of the gusset goes on the outside of the leg, and the cord goes on the inside of the leg. Before attaching the gusset, route the leg cord through the slot on the top of the leg so the cord goes to the inside of the table. Using the mallet, firmly attach the cord grommet to the slot.
- Align a gusset with a leg so that the screw holes on the gusset match the threaded holes in the leg.
- Secure a gusset to a leg with four Socket Head Cap Screws. Repeat for the other leg.

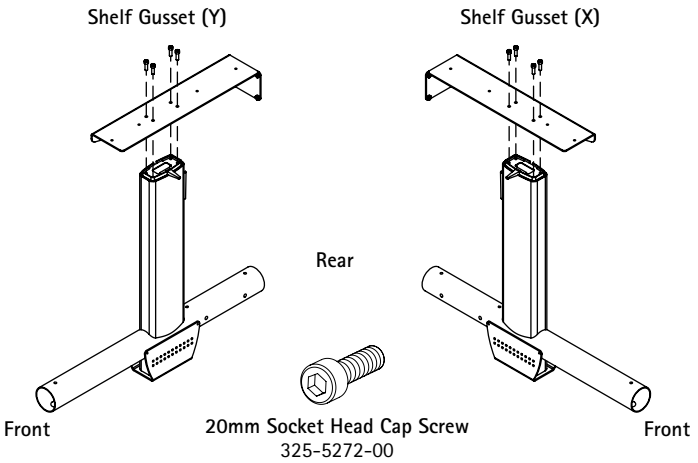

STEP 3

Attach Leg Assembly to Shelf

- Set the top of the cap screws into the recessed holes in the shelf. Align the holes on the gusset with pre-drilled holes on the shelf. Attach each leg with four Wood Screws. Don't tighten all the way.

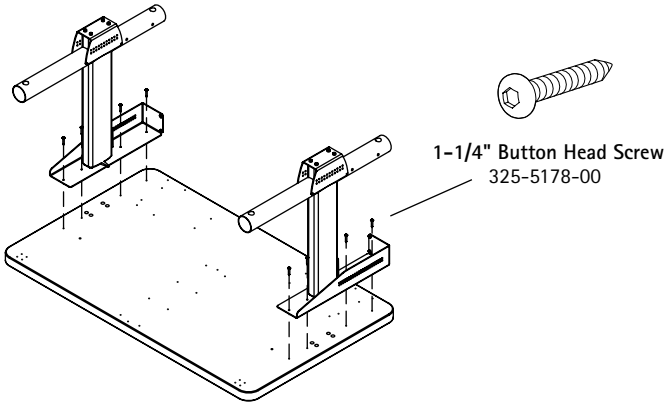

STEP 4

Attach Cross Tubes to Base Tubes

- Position the Right Leg Assembly (from Step 2) with two Cross Tubes as shown. Insert one Cap Screw with a Curved Washer through a side hole, carefully threading the Screw into the Cross Tube, but do not tighten all the way. Repeat for the remaining three side holes.
- Once all cross tubes are installed, tighten all the basetube screws. Leave the Wood Screws loose until Step 6.

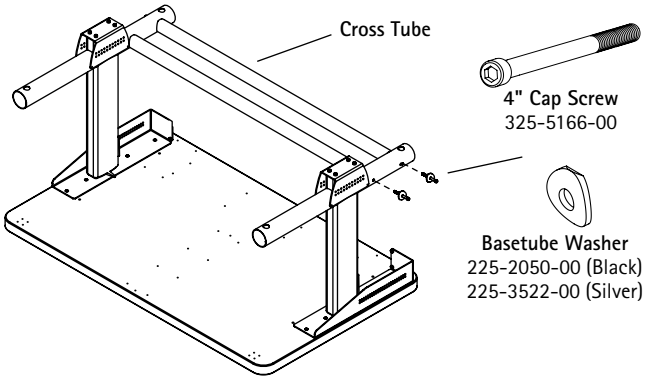

STEP 5

Install Keypad and Control Box

- Select positions for the Keypad and Control Box, either the left or right side of the Table. Remember that the Keypad and Control Box must be on the same side of the Table. Also, the power cord comes off the back of the Control Box and should be positioned so it can reach the outlet.
- Place the Control Box on the shelf so that the cord outlets are at the back, then align the Box with the pre-drilled holes on the shelf. Secure with four Wood Screws.
- Align the Keypad and its housing with the four pre-drilled holes at the front of the keyboard surface so that the buttons are face-down at the front edge of the keyboard surface and the flat side of the housing is against the shelf. Using four Phillips Head Screws, attach the Keypad and its housing to the front of the keyboard surface.
- Plug the leg cords into the control box. Insert cable clips into the table and route leg cords through them. Plug the keypad cable into control box. Insert a cable clip into the table and route the cord through it.

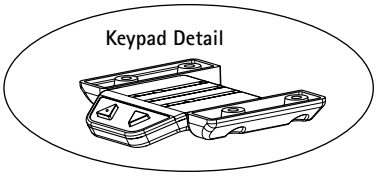

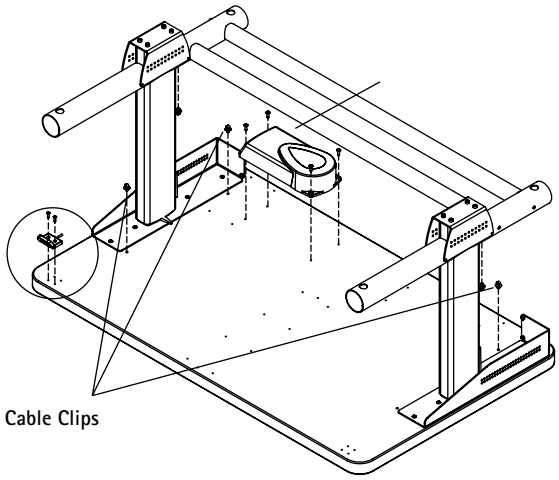

3/4" Phillips Head Screw
325-5370-00

3/4" Wood Screw
325-5106-00

STEP 6

Attach Cable Trough

- Align the cable trough with the flanges on each leg gusset and the pre-drilled holes on the shelf. Before installing the trough, make sure that cables are routed through the ends of the trough, not into the side of the trough. Secure the trough to the gussets with four Button Head Cap Screws. Secure the trough to the shelf using eight Wood Screws.

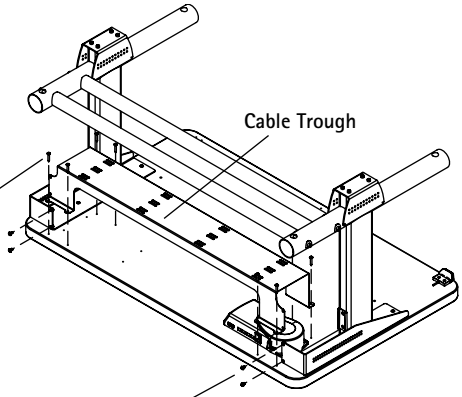

1-1/4" Wood Screw
325-5178-00

3/8" Button Head Cap Screw
325-5149-00

STEP 7

Add Casters and Turn Table Right Side Up

- Thread casters into the caster inserts in each leg. This is a lot easier if you lock the casters first.
- With the help of another person, carefully rotate the Table onto its casters.
- Plug the power cord into the control box and an outlet. Insert a cable clip into the base tube closest to the Control Box and route the power cord through it.

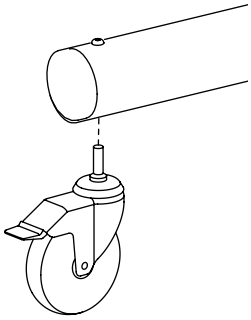

STEP 8

Attach Cross Bar

- Using the keypad, move shelf all the way up. (Check the legs for excess lubricant and wipe down if needed.)
- Align the cross bar so that the tapered ends of the cross bar brackets line up with the leg brackets. Using the mallet, drive the cross bar completely into place (a few whacks on the left, a few on the right, then left, then right...).

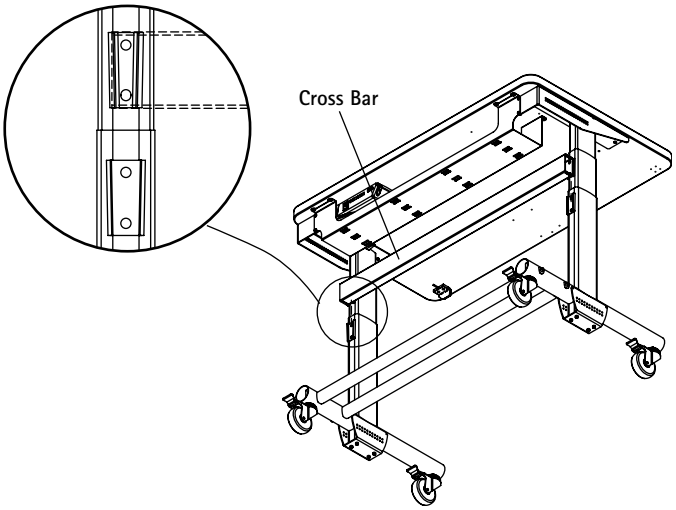

STEP 9

Insert End Caps

- Pop end caps into cross bar and base tubes. Use the mallet to set them into place.

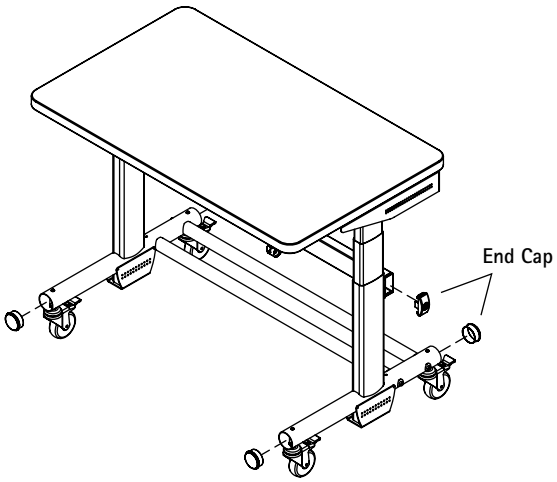

STEP 10

Home the Legs

- Press down button until the table reaches its lowest point and stops moving. Release the button for 1-2 seconds. Press down button again for 3-5 seconds and you will see the table home itself.
- Press up button until the table tops at the highest point and hold for 3-5 seconds. Press the down button for 2-3 seconds, then the up button again until it tops at the highest point and hold again for 3-5 seconds. (The goal is to have the table hold at it's highest point twice.)
- If the legs ever fail to function properly, unplug the power cord, wait 10 seconds, plug the power cord back in and repeat the above steps.
- Legs must also be homed any time that power is disconnected from the legs.
- If the legs are not homed at both the top and the bottom, the table will only move at half its normal speed.

STEP 11

Add Accessories and Install Your Equipment

- Now add your Anthro accessories and install your equipment.
- A word of caution: the height range of Elevate may be longer than the cords on your equipment. Equipment that is mounted in a SideRack or Equipment Shelf, for example, will not move up and down with the table, so raise and lower the table to its highest and lowest positions when all equipment is installed to make sure that the cords are long enough.

Congratulations! Your assembly is complete!

ANTHRO®

Technology Furniture®

– Fast and Friendly!

Anthro Corporation® | 10450 SW Manhasset Dr. | Tualatin, OR 97062
Toll-free: 800.325.3841 | Fax: 800.325.0045 | email: sales@anthro.com | anthro.com
Outside the U.S. | Tel: 503.691.2556 | Fax: 503.691.2409

300-5373-00

Warranty:
The Table has a Lifetime Warranty. The electrical has a one year Warranty. The power cord is not covered under Warranty.

Notices:
Technology Furniture™ and Elevate™ are trademarks of Anthro Corporation. Anthro reserves the right to modify the design and specifications without prior notice.